Courtesy of http://BlackRadios.terryo.org

INSTRUCTION BOOK

FOR

MODELS 1501 AND 1502 SPECIAL PURPOSE RECEIVERS

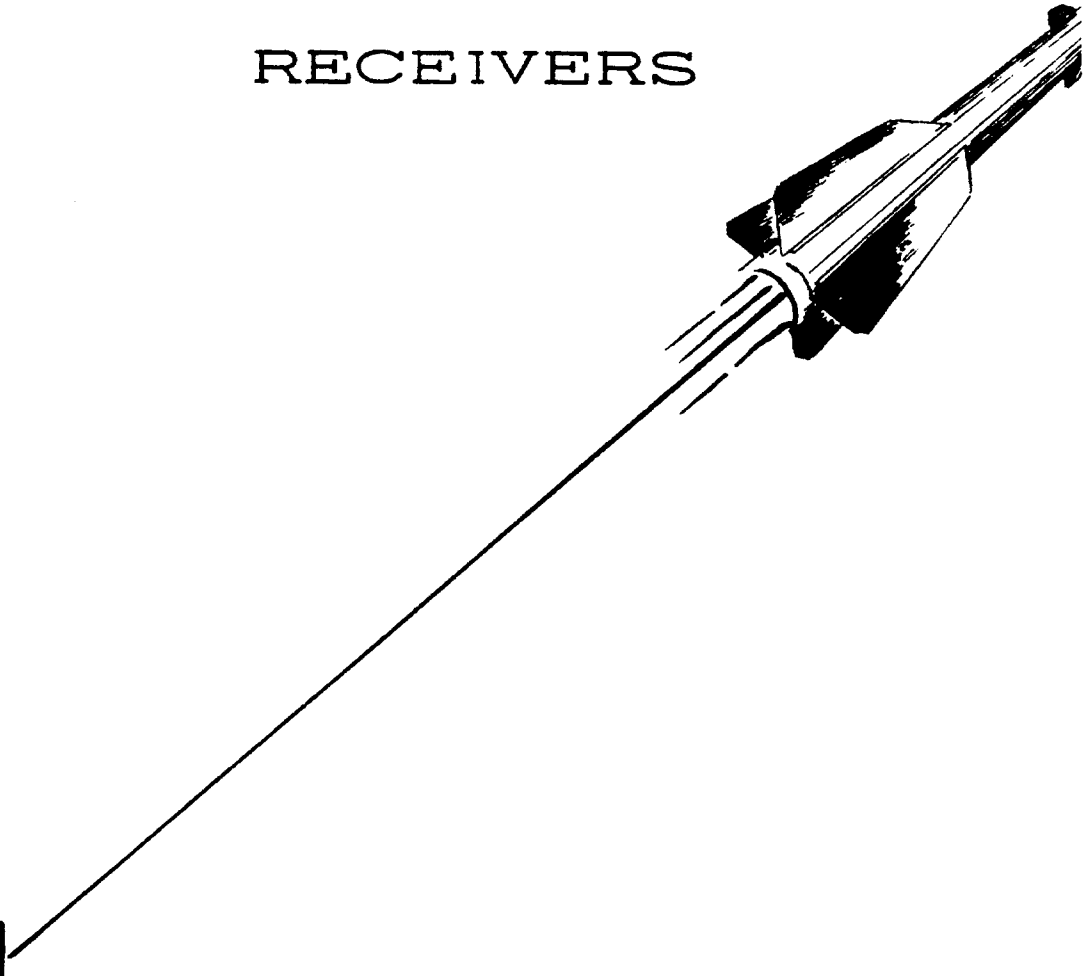

NEMS CLARKE CO

919 JESUP BLAIR DRIVE • SILVER SPRING, MARYLAND

A DIVISION OF Vitro CORPORATION OF AMERICA

Courtesy of http://BlackRadios.terryo.org

INSTRUCTION BOOK
FOR
MODELS 1501 AND 1502
SPECIAL PURPOSE
RECEIVERS

NEMS-CLARKE COMPANY
A Division of Vitro Corporation of America
SILVER SPRING, MARYLAND

SMM 4796062058

Courtesy of http://BlackRadios.terryo.org

WARNING

This equipment employs voltages which are dangerous and may be fatal if contacted by operating personnel. Extreme caution should be exercised while working with this equipment.

Courtesy of http://BlackRadios.terryo.org

TABLE OF CONTENTS

Paragraph — Page

SECTION 1

GENERAL DESCRIPTION

1. Purpose of Equipment 1-4
2. Description of Equipment 1-4

SECTION 2

THEORY OF OPERATION

1. Analysis, Models 1501 & 1502 Receivers 2-2
   a. Block Diagram 2-2
2. Model 1501 Receiver Only 2-2
   a. Antenna 2-2
   b. RF Stage 2-2
   c. Mixer 2-2
   d. Local Oscillator 2-3
3. Model 1502 Receiver Only 2-3
   a. Antenna 2-3
   b. First RF Stage 2-3
   c. Second RF Stage 2-3
   d. Mixer 2-4
   e. Local Oscillator 2-4
4. Models 1501 & 1502 Receivers (continued) 2-4
   a. IF Amplifier Function Switch in FM Position 2-4
   b. IF Amplifier Function Switch in AM Position 2-5
   c. Beat Frequency Oscillator 2-5
   d. Video 2-5
   e. The Squelch Circuit 2-6
   f. Audio Amplifier 3-1
   g. Panoramic Output 3-1
   h. Power Supply 3-1

Courtesy of http://BlackRadios.terryo.org

Paragraph Page

SECTION 3

OPERATION

1. Introduction 3-1

2. Control Settings 4-1

a. Line voltage selector switch 4-1

b. Power 4-1

c. Modulation 4-1

d. Video Bandwidth 4-1

e. Squelch 4-1

f. Audio 4-1

SECTION 4

MAINTENANCE

1. Introduction 4-1

2. Alignment Procedure. Function Switch in FM Position. 4-2

a. Second Limiter Alignment 4-2

b. Discriminator Alignment 4-3

c. IF Alignment 4-4

3. BFO Adjustment. Function Switch in AM Position, AGC-Man. switch in "Man." position . . 4-5

4. Mechanical Adjustments 4-5

a. Dial Adjustment 4-5

b. Local Oscillator Adjustment, Model 1502 Only 4-5

c. Local Oscillator Adjustment, Model 1501 Only 4-6

5. RF Amplifier Alignment 4-6

a. RF Amplifier Alignment, Model 1502 Only. 4-6

b. RF Amplifier Alignment, Model 1501 Only. 4-7

SECTION 5

PARTS LIST

Parts List . . . . . 5-1 thru 5-7

Addenda 5-8

Courtesy of http://BlackRadios.terryo.org

LIST OF ILLUSTRATIONS

Fig.	Title	Page
1-1	Models 1501 and 1502 Special Purpose Receivers, Front View	1-1
2-1	Block Diagram, Models 1501 and 1502 Receivers	2-1
2-2	Models 1501-1502 Receiver Squelch Circuit, Simplified Schematic	2-6
4-1	Model 1502 Receiver, Top View (Dust Cover Removed)	4-10
4-2	Model 1501 Receiver, Bottom View (Dust Cover Removed)	4-11
4-3	Model 1501 Receiver, Rear View (Dust Cover Removed)	4-12
4-4	Resistor Boards Used in Models 1501-1502 Receivers	4-13
4-5	Tuner, Model 1501 Receiver, Bottom View (Dust Cover Removed)	4-14
4-6	Tuner, Model 1502 Receiver, Bottom View (Dust Cover Removed)	4-15
4-7	IF Strip, Models 1501-1502 Receiver, Bottom View (Dust Cover Removed)	4-16
4-8	BFO Unit, Models 1501-1502 Receivers, Bottom View	4-17
4-9	Model 1501 Receiver, Schematic Diagram	4-18
4-10	Model 1502 Receiver, Schematic Diagram	4-19

LIST OF CHARTS & TABLES

Table	Title	Page
1-1	Performance Specifications	1-2
1-2	Tube Complement	1-3
4-1	Voltage Measurements, Models 1501 and 1502 Receivers	4-8
5	Parts List	5-2

Courtesy of http://BlackRadios.terryo.org

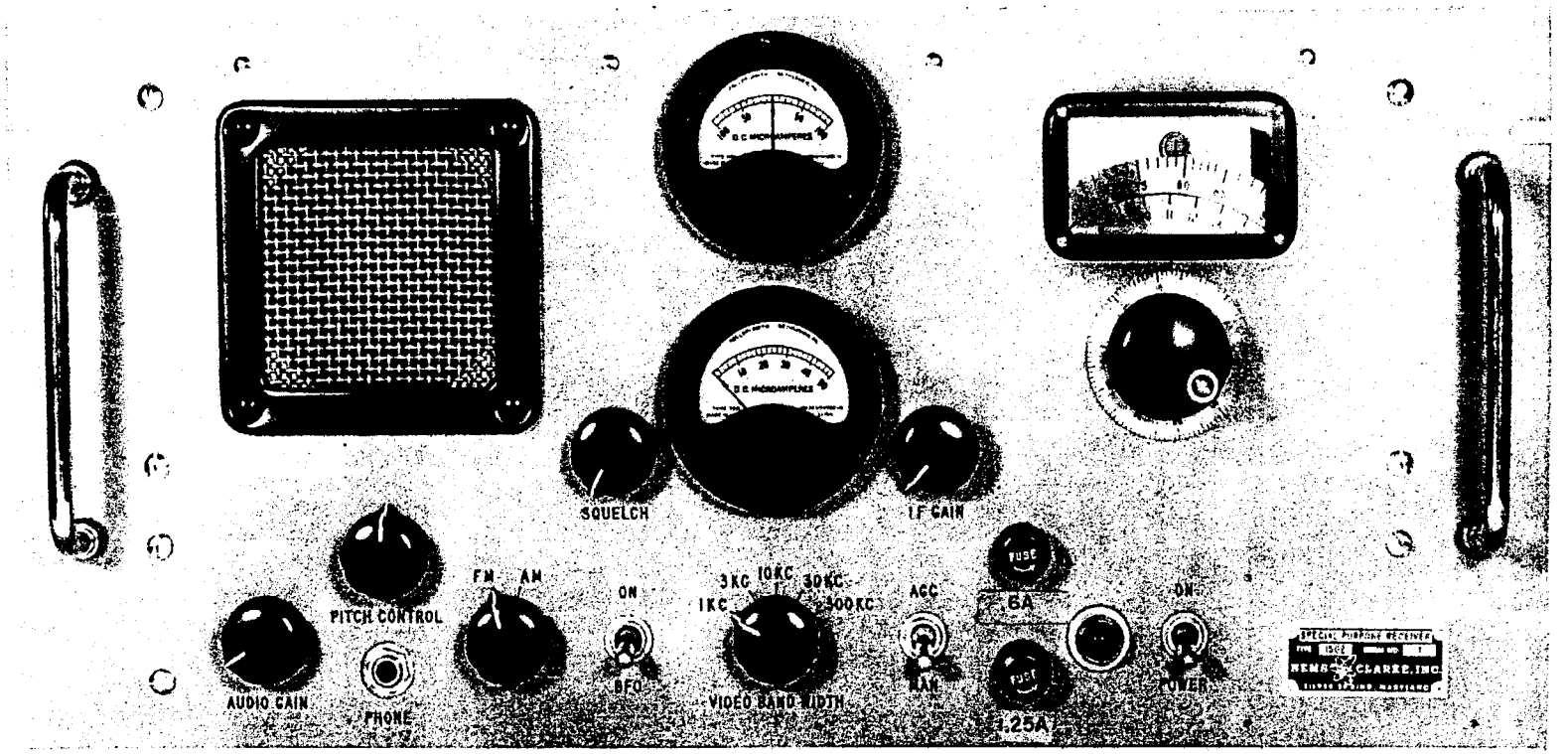

Fig. 1-1. Models 1501 and 1502 Special Purpose Receivers, Front View

Courtesy of http://BlackRadios.terryo.org

Front View 1501A

Courtesy of http://BlackRadios.terryo.org

PERFORMANCE SPECIFICATIONS

	Model 1502	Model 1501
Tuning Range	55-260 mc	55-260 mc
IF Rejection	70 db, minimum	70 db, minimum
Image Rejection	60 db, minimum	> 40 db below 130 mc. 30 db min. at any frequency.
Noise Figure	6 db, maximum	11.5 db, maximum
Absolute Sensitivity Measured without band-restricting filters	4 uv produces at least 23 db S/N with 100-kc deviation, 1 kc modulation frequency.	8 uv produces at least 23 db S/N ratio with 100-kc deviation, 1 kc modulation frequency.
IF Frequency	21.4 mc	21.4 mc
IF Bandwidth	300 kc	300 kc
Outputs Provided	1. Signal--Wide band for supplying high-impedance load. 2. Monitor--Panel-mounted speaker, headphones, or 600 ohms balanced output for external use.	1. Signal--Wide band for supplying high-impedance load. 2. Monitor--Panel-mounted speaker, headphones, or 600 ohms balanced output for external use.
FM Output	0.10 volt per kc, approx.	0.10 volt per kc approx.
AM Output	Approx. 10V RMS for 500 uv input modulated 50% at 1 kc.	Approx. 10V RMS for 5 mv input modulated 50% at 1 kc.
FM Output Stability	Varies less than 2 db for inputs above 1 uv.	Varies less than 2 db for inputs above 4 uv.
AM Output Stability	7 db maximum variation for 40-db variation in input.	7 db maximum variation for 40-db variation in input.
Input Impedance	Approx. 50 ohms	Approx. 75 ohms
Video Response	10 cps to 300 kc	10 cps to 300 kc
Video Bandwidth Control	5 positions--1, 3, 10, 30, and 300 kc	5 positions--1, 3, 10, 30, and 300 kc
Power Input	115/230 volts, 50 to 60 cps and 400 cps	115/230 volts, 50 to 400 cps
Power Consumption	127 watts	77 watts
Weight	37 lb.	32 lb.

Table 1-1. Performance Specifications

Courtesy of http://BlackRadios.terryo.org

TUBE COMPLEMENT

Symbol	Type	Function
V-105	6DC6	1st IF amplifier
V-106	6DC6	2nd IF amplifier
V-107	6CB6	3rd IF amplifier, AM 1st limiter, FM
V-108	6AK5	AM detector, AM 2nd limiter, FM
V-109	6AL5	Discriminator
V-110	6AL5	AGC delay diode
V-111	6CB6	BFO
V-112	5R4GY	Rectifier
V-113	OA2	Voltage Regulator
V-114	OA2	Voltage Regulator
V-115	12AU7	Squelch
V-116	12AU7	Audio Amplifier
V-117	12AU7	1st video amplifier and tuning meter bridge
V-118	12AU7	Video cathode follower output
V-201	416B	1st RF amplifier
V-202	6J4	2nd RF amplifier
V-203	6AK5	Mixer
V-204	6AF4A	Local oscillator

Table 1-2. Tube Complement

Courtesy of http://BlackRadios.terryo.org

SECTION 1

GENERAL DESCRIPTION

1. PURPOSE OF EQUIPMENT.

The Models 1501 and 1502 Special Purpose Receivers have been specifically designed to meet the requirements of a highly stable, extremely sensitive AM-FM-CW receiver for critical application in the 55- to 260-mc range.

The receivers have self-contained power supplies and are capable of operation from a power source of 115/230 volts ± 10%, 50 to 60 and 400 cycles ± 5%, single phase, alternating current. Selection of primary voltage is accomplished by a two-position toggle switch located on the rear apron of the chassis. The switch is equipped with a locking device which prevents accidental switching from one voltage to the other.

Among the special features of the Models 1501 and 1502 receivers are audio squelch with adjustable threshold, FM reception with very low distortion, AM reception, BFO for CW reception, and a separate high-quality 600-ohm audio output. The video output signal passes through a variable low-pass filter, allowing a greatly improved S/N ratio when the full video bandwidth is not needed.

For further details concerning the capabilities and special features of the Models 1501 and 1502 receivers, see table 1-1, Performance Specifications.

2. DESCRIPTION OF EQUIPMENT.

The Models 1501 and 1502 receivers are 8-23/32 inches high by 19 inches wide by 14-1/4 inches deep. They each occupy approximately 1.62 cubic feet. The Model 1501 receiver weighs approximately 32 pounds, and the Model 1502 receiver weighs approximately 37 pounds. Panel and chassis are of aluminum construction, and the panel is finished in smooth gray enamel. The panel is designed for standard 19-inch relay-rack mounting, although the receivers are equipped with dust covers and louvered side panels, and may be used independently on a shelf or table. The IF amplifier and RF tuner are built as completely shielded subassemblies in both receivers, with most of the audio and video components mounted on two terminal boards on the underside of the main chassis.

Figure 1-1 shows a front view of the Models 1501 and 1502 receivers, and table 1-2 shows the tube complement. The difference in the two receivers lies primarily in the type of RF tuner employed, and the consequent mechanical and electrical differences are fully explained and illustrated in the appropriate sections of this book.

Courtesy of http://BlackRadios.terryo.org

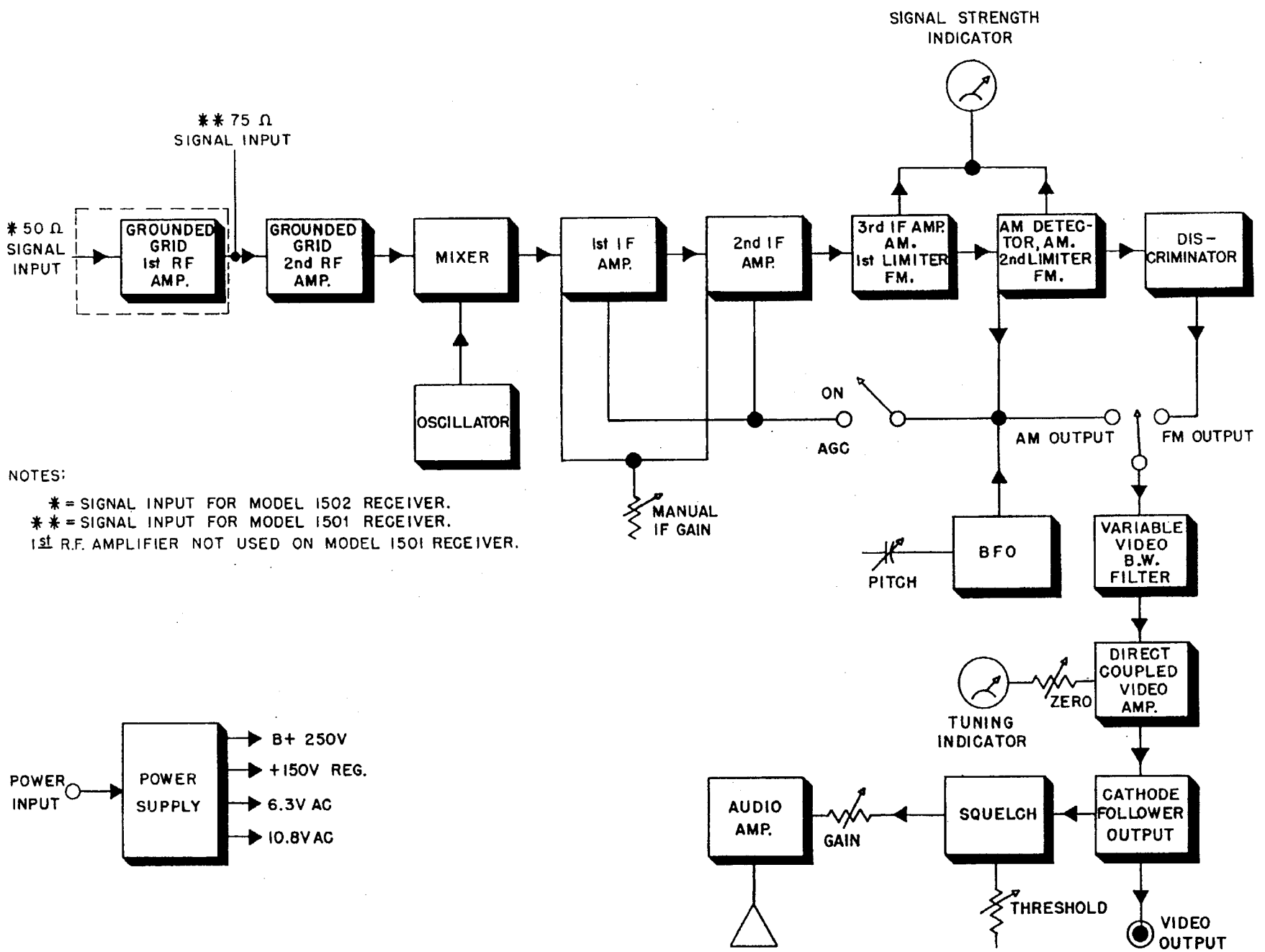

NOTES:

* = SIGNAL INPUT FOR MODEL 1502 RECEIVER.
** = SIGNAL INPUT FOR MODEL 1501 RECEIVER.
1st R.F. AMPLIFIER NOT USED ON MODEL 1501 RECEIVER.

Fig. 2-1. Block Diagram, Models 1501 and 1502 Receivers

Courtesy of http://BlackRadios.terryo.org

SECTION 2

THEORY OF OPERATION

1. ANALYSIS, MODELS 1501 & 1502 RECEIVERS.

a. A block diagram of the Models 1501 and 1502 receivers is shown in Figure 2-1. The circuit, with the function switch in the AM or FM position, is a single superheterodyne with an IF of 21.4 mc.

The tuner is designed to produce the lowest possible noise figure consistent with the type tube used (Model 1501 uses a 6J4 first RF amplifier, and Model 1502 uses a 416B first RF amplifier) and a practical tuning structure capable of tuning 55 to 260 mc, with reasonably uniform performance over the band.

The IF amplifier, with the function switch in the FM position, uses two stages of amplification, cascade limiters, and a phase-shift discriminator. With the function switch in the AM position, AGC voltage is applied to the first two stages, and the second limiter becomes the AM detector.

The output signal of the IF strips (AM or FM) is fed through a variable low-pass filter, thus providing the maximum S/N ratio when the full video bandwidth is not needed. The output of the filter drives a two-stage direct-coupled video amplifier with cathode follower output. A portion of the follower output drives a four-stage squelch-audio amplifier circuit.

2. MODEL 1501 RECEIVER ONLY.

a. ANTENNA.--The input impedance of the receiver is approximately 75 ohms over the frequency range of 55 to 260 mc. The input signal is applied through a type "N" coaxial receptacle located on the rear apron of the chassis. This is a UG-593/U connector.

b. RF STAGE.--The input signal is applied to the cathode of the 6J4 (V-202) grounded grid amplifier. The basic tuning element is a Mallory type S-4 spiral inductuner with the input circuit broadly tuned by the first section. The RF amplifier is operated at maximum gain at all times in order to produce the optimum S/N ratio.

The plate of the 6J4 is coupled to the grid of the 6AK5 (V-203) pentode mixer by a double-tuned band-pass filter. A capacity "T" is used to provide coupling between the primary and secondary tuned circuits. The shunt element of the "T" is adjustable, thus providing a control over the interstage bandwidth. A small iron-core inductor across the shunt element of the "T" network approaches parallel resonance at 55 mc, thus increasing the coupling at the low end and providing a more uniform coupling over the tuning range of 55 to 260 mc.

c. MIXER.--A 6AK5 pentode is used as a mixer. The oscillator signal is injected into the grid circuit, developing an operating bias proportional to the amplitude of the local oscillator signal. This

Courtesy of http://BlackRadios.terryo.org

causes a minimum effect on the receiver operation due to variations in local oscillator amplitude. A decoupled test point (TP-201) from a tap on the mixer grid resistors provides a convenient means for observing the response of the RF circuits.

d. LOCAL OSCILLATOR.--The local oscillator utilizes a 6AF4A tube in a modified Colpitts configuration. The end inductors are made of heavy straps to insure frequency stability. The frequency stability of the oscillator is very high due to the use of a high G_m tube which is loosely coupled to the high-Q tank circuit.

3. MODEL 1502 RECEIVER ONLY.

a. ANTENNA.--The input impedance of the receiver is approximately 50 ohms over the frequency range of 55 to 260 mc. The input signal is applied through a type "N" 50-ohm coaxial receptacle located on the rear apron of the chassis.

b. FIRST RF STAGE.--The input signal is applied to the cathode of the 416B low-noise planar triode. To prevent loss of input signal due to cathode-to-filament capacity, the filaments are kept above RF ground with broad-band chokes. The input resistance of the 416B is approximately equal to $\frac{2}{G_m}$ when $R_L = R_p$, and in this case is 40 ohms.

The cathode circuit is not tuned, due to the extreme bandwidth produced by the 40-ohm shunt load and the low cathode-to-ground capacity.

The plate tank circuit takes the form of a modified pi network and is used to couple the high-impedance plate circuit of the 416B tube to the low input impedance of the 6J4 grounded grid second RF amplifier.

c. SECOND RF STAGE.--The output of the pi network drives the cathode of the 6J4 grounded-grid second RF amplifier. A low-noise second stage is used so that the system noise figure (first RF, second RF, and mixer) is essentially that of the first stage.

The plate of the 6J4 is coupled to the grid of the 6AK5 pentode mixer by a double-tuned overcoupled band-pass filter. A capacity "T" is used to provide coupling between the primary and secondary tuned circuits. The shunt element of the "T" is adjustable, thus providing a control over the interstage bandwidth. A small iron-core inductor across the shunt element of the "T" network approaches parallel resonance at 55 mc, thus increasing the coupling at the low end and providing a more uniform coupling over the tuning range of 55 to 260 mc.

The single-tuned high-Q plate circuit of the 416B tube is used to "fill in" the dip in the overcoupled interstage network. The overall RF response when viewed at the mixer grid test point is essentially flat over the band.

Courtesy of http://BlackRadios.terryo.org

A convenient means for measuring the plate current of the 416B tube is made possible by TP-201 at the junction of R-201 and R-202, the cathode bias resistors. A VTVM at TP-201 will read the voltage drop across 100 ohms. Thus 2V equals 20 ma, 3V equals 30 ma, etc.

The filament of the 416B is operated from a 10.8-volt winding of T-110 through a total series dropping resistor of 4 ohms. This produces a self-regulating effect, which extends the tube life.

A blower motor mounted on the front-end subassembly is used to cool the 416B tube. The motor plugs into the main chassis with a 6-pin Jones plug. A jumper between pins 5 and 6 of the Jones plug removes plate voltage from the 416B when the motor is disconnected, thus protecting the tube.

Positive grid bias of 8 volts is applied from a voltage divider from the 150-volt regulated B+. This voltage is necessary to cancel the cathode self-bias voltage of 8.2 volts so that the tube will operate with approximately 0.2 volt bias. The d-c degeneration due to the large cathode resistor has a considerable stabilizing effect on the 416B tube and minimizes performance variations from one tube to the next if replacement becomes necessary.

If, for any reason, the grid bias voltage is shorted or removed, the plate current is reduced and the tube will not be damaged.

d. MIXER.--A 6AK5 pentode is used as a converter. The oscillator signal is injected into the grid circuit, developing an operating bias proportional to the amplitude of the local oscillator signal. This causes a minimum effect on the receiver operation due to variations in local oscillator amplitude. A decoupled test point (TP-202) from a tap on the mixer grid resistors provides a convenient means for observing the response of the RF circuits.

e. LOCAL OSCILLATOR.--The local oscillator utilizes a 6AF4A tube in a modified Colpitts configuration. The end inductors are made of heavy straps to insure frequency stability. The frequency stability of the oscillator is very high due to the use of a high G_m tube which is loosely coupled to the high-Q tank circuit.

4. MODELS 1501 & 1502 RECEIVERS (continued).

a. IF AMPLIFIER FUNCTION SWITCH IN FM POSITION.--The first IF transformer, located on the IF subassembly, is connected to the mixer plate through a short length of RG62/U coaxial cable. Two high-gain stages (V-105, V-106) using 6DC6 tubes are followed by a 6CB6 (V-107) first limiter and a 6AK5 (V-108) second limiter. A 6AL5 (V-109) is used in a discriminator circuit of the phase-shift type. Accurate balance is obtained by using a bifilar winding for the secondary. An automatic gain control voltage is derived from the first limiter grid circuit and applied to the first IF amplifier. The first IF

Courtesy of http://BlackRadios.terryo.org

amplifier and the first limiter do not have their cathode resistors bypassed, thus causing cathode degeneration which practically eliminates the detuning caused by changes in tube input capacitance resulting from a change in the bias voltage. Such circuitry is not necessary in the second limiter due to the different tube structure and smaller change in grid bias. A minimum of approximately one volt bias is on the second limiter due to grid rectification of noise signals. A self-resonant choke is connected in the output lead of the discriminator to prevent IF signals from leaving the IF subassembly. A relative signal-strength meter with a logarithmic characteristic is operated from the voltage developed at the grids of the limiters.

b. IF AMPLIFIER FUNCTION SWITCH IN AM POSITION.--The first two high-gain 6DC6 remote cutoff amplifiers (V-105, V-106) receive an AGC voltage developed at the grid of the 6AK5 (V-108) AM detector. The third IF amplifier (V-107), which drives the AM detector, is not gain controlled, but its signal-handling capabilities have been improved by increasing the screen voltage. A self-resonant choke is connected in the AM output lead from the 6AK5 AM detector (V-108) to prevent IF signals from leaving the IF subassembly.

With the AGC switch in the manual position the AGC voltage is shorted to ground, and the IF gain control in the cathode circuit of the two 6DC6 IF amplifiers is unshorted and becomes operative. The gain-controlled stages use cathode compensation of input capacity variation with bias change.

The zero-center tuning meter operates only in the FM position. Correct tuning of an AM signal may be accomplished by first tuning in the signal with the selector switch in the FM position and then switching to the AM position.

The signal-strength meter, M-101, is not calibrated, though it may be used for a relative indication of signal strength. The signal-strength meter is switched between the limiters and the AM detector in the 300-kc-wide amplifier.

c. BEAT FREQUENCY OSCILLATOR.--The BFO uses a 6CB6 type tube in an electron-coupled Hartley circuit. The BFO is a completely shielded subassembly.

d. VIDEO.--The output of the IF strips, AM or FM, is fed to the input of a 5-position lowpass filter. The cutoff frequency can be set to 300 kc, 30 kc, 10 kc, 3 kc, or 1 kc by a front-panel selector switch. The output of this filter drives one half of a 12AU7 direct-coupled video amplifier (V-117A). A zero-center scale meter (M-102) is used as a tuning indicator and is connected in a bridge circuit consisting of the video amplifier and the other half of the 12AU7 (V-117B). A partial bypass of the cathode of the first video amplifier extends the high frequency response. The output video amplifier is a 12AU7 tube (V-118) connected as a direct-coupled cathode follower. A tap on the cathode resistor of the output

Courtesy of http://BlackRadios.terryo.org

video amplifier provides the signal source to drive the monitor audio amplifier.

e. THE SQUELCH CIRCUIT.--The squelch circuit is best described with the aid of the simplified schematic of Fig. 2-2. V-115A acts as a gated audio amplifier stage, while V-115B serves as a d-c amplifier and gate generator. The circuit is connected in such a manner that V-115B has zero grid voltage when no signal is being received and has a negative signal applied when a carrier is being received. The audio amplifier stage, V-115A, will pass an audio signal when the d-c amplifier, V-115B, is nonconducting, and will not pass an audio signal when V-115B is in a conducting condition. In this manner the audio circuit is disabled when no carrier is being received. The carrier strength necessary to make the audio section operative is adjusted by the threshold (squelch) control R-164. The operation of this circuit is detailed in the following paragraph.

The d-c amplifier tube, V-115B, is connected between the 150V supply and ground. The fixed bias on this stage is adjusted by R-164. The audio section V-115A, is connected between the 240-volt supply and the 150-volt supply. The bias on this stage is the voltage drop across the cathode resistor, R-165, plus the voltage drop, if any, in the plate load resistor, R-167, in V-115B. Assuming no signal is being received, the grid of the d-c amplifier tube is zero, or at most has a very small negative voltage on it.

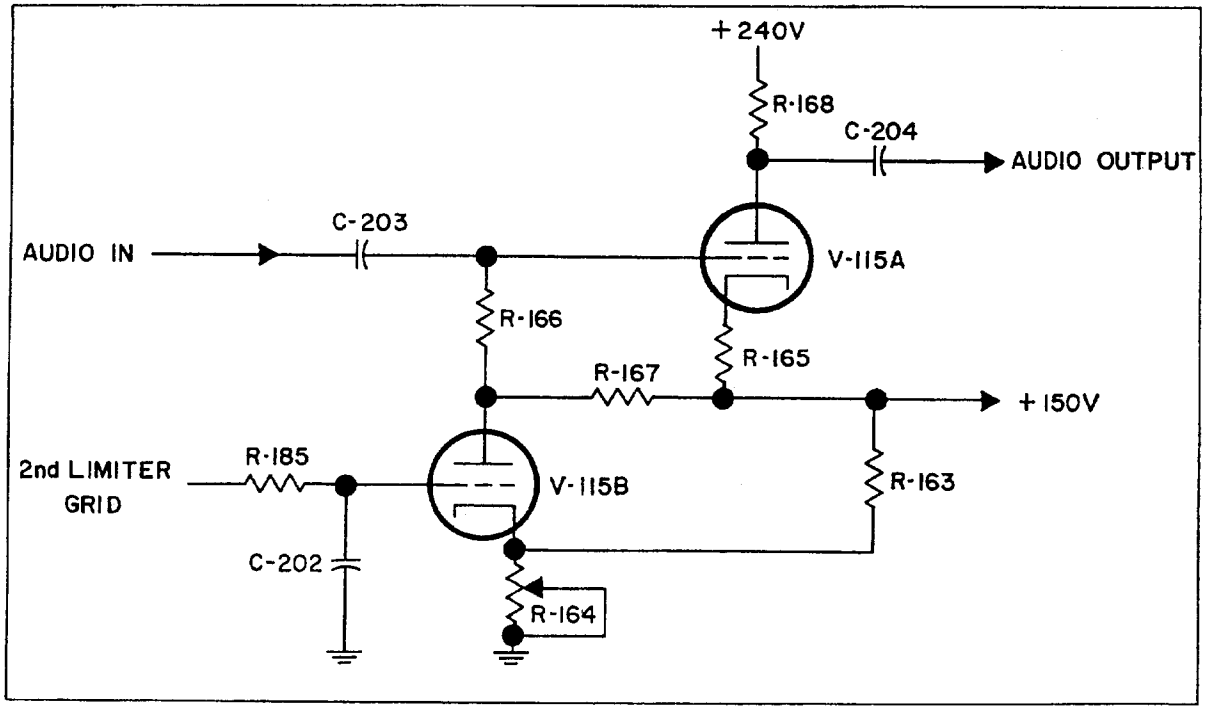

Fig. 2-2. Models 1501 and 1502 Receiver Squelch Circuit, Simplified Schematic

Courtesy of http://BlackRadios.terryo.org

R-164 is adjusted until the noise just disappears from the output. In this condition the d-c amplifier tube is drawing plate current, and the drop across its plate load, R-167, appears as a bias to V-115A. This voltage drop is sufficient to cut off V-115A and disable the audio signal. When a carrier is tuned in, a negative voltage is supplied from the second limiter in the IF strip through an isolation resistor, R-185, to the grid of V-115B. This voltage is sufficient to cut off V-115B, causing the voltage to drop to zero across the V-115B plate load resistor, R-167. V-115A receives only its normal cathode bias generated in its cathode bias resistor, R-165, and audio signals are passed through to the output.

When receiving amplitude-modulated signals with a high percentage of modulation, the squelch circuit may be cut off on negative modulation peaks when the envelope amplitude becomes zero. To prevent this, a filter consisting of R-185 and C-202 is placed between the limiter and the grid of the d-c amplifier. This filter has a long enough time constant to reject the lowest audio frequency likely to be received, but not long enough to noticeably delay operation of the squelch.

f. AUDIO AMPLIFIER.--The output of V-115A is used to drive a two-stage resistance coupled audio amplifier. The output amplifier drives a four-inch panel-mounted speaker, a phone jack which silences the speaker when in use, and an independent 600-ohm balanced output.

g. PANORAMIC OUTPUT.--An output at the IF, 21.4-mc, frequency is provided for connection to a panoramic adapter. This output is obtained from the 6AK5 (V-203) mixer plate load through a capacity divider. A special panoramic adapter, type no. T-3000 CI, may be secured from Panoramic Radio Products, Inc., 10 South Second Avenue, Mount Vernon, New York.

h. POWER SUPPLY.--A conventional two-section capacitive input filter power supply delivers a d-c potential of 240 volts. V-113 and V-114 provide two separate 150-volt d-c regulated outputs.

A 6.3-volt winding supplies the filaments of all tubes except V-112 and V-201. V-201 is supplied by a separate 10.8-volt winding in series with an external 4-ohm dropping resistor and V-112 by a separate 5-volt winding of the power transformer T-110.

The models 1501-1502 receivers have a toggle switch located on the rear apron, which provides for the selection of either 115-volt or 230-volt operation.

SECTION 3

OPERATION

1. INTRODUCTION.

Figure 1-1 shows the appearance and location of controls on the front panel of the Models 1501 and 1502 Special Purpose Receivers.

Courtesy of http://BlackRadios.terryo.org

2. CONTROL SETTINGS.

a. Set line voltage selector switch S-105, located on the rear apron of the chassis, to the appropriate position for the line voltage encountered. This switch provides for input voltages of either 115 or 230 VAC, and is equipped with a locking device which prevents accidental switching from one voltage to the other.

b. POWER.--Turn on the power switch, S-104, located on the front panel.

Note: For the Model 1502 receiver a time delay relay (K-101) is used to delay the application of plate voltage to the 1st and 2nd RF amplifiers for approximately 120 seconds. Delay of plate voltage to the 416B tube (V-201) is in the interest of improved tube life. The receiver will therefore be inoperative for approximately two minutes after it is turned on.

c. MODULATION.--The modulation selector switch (S-101) has two positions, AM or FM.

(1) FM.--The function switch must be in the FM position. The IF bandwidth is 300 kc. The BFO should be in the "OFF" position. The Manual-AGC switch (S-102) and the IF gain control are inoperative in the FM position. The zero-center tuning meter (M-102) is operative only in the FM position.

(2) AM.--The function switch must be in the AM position. The Manual-AGC switch should be in the AGC position except when the BFO is to be used. For BFO operation the manual IF gain control (R-105) should be adjusted to produce the loudest beat note.

d. VIDEO BANDWIDTH.--The video bandwidth switch (S-103) has five positions: 300KC, 30KC, 10KC, 3KC, and 1KC. The position resulting in the best S/N ratio should be used.

e. SQUELCH.--The squelch circuit is inoperative with the squelch control (R-164) counterclockwise against its stop. In the absence of a signal, rotate the squelch threshold control clockwise until the background noise just becomes inaudible. Any usable signal should then disable the squelch circuit.

f. AUDIO.--Adjust as needed.

SECTION 4

MAINTENANCE

1. INTRODUCTION.

The Models 1501 and 1502 receivers should give comparatively trouble-free performance. If, however, trouble occurs, rapid and accurate trouble-shooting can be accomplished by the application of a simple effect-to-cause reasoning process, along with the data given in this section. A thorough knowledge of the theory of operation, as contained in section 2, is essential to successful effect-to-cause reasoning.

Courtesy of http://BlackRadios.terryo.org

As a general statement, it may be said that frequent recurrence of a trouble usually indicates that the effect, not the cause, has been remedied, and further investigation should be made.

In time, the blower for the 416B tube (V-201, used only on the Model 1502 receiver) may become clogged with dust collected from the atmosphere. Since this impairment of the blower's efficiency may cause the loss of a very expensive tube, it is recommended that the blower be disassembled and cleaned whenever it is found to be sufficiently dirty to warrant such action.

The voltage chart and the overall schematic diagram contained herein will be useful in locating trouble. Such trouble as broken leads or solder joints and loose or defective tubes will not be discussed in detail, but should be suspected and searched for in all cases where the trouble is not immediately apparent. Illustrations given in this section show the location of all major components and such smaller components as cannot be readily identified from adjacent stencils on the receiver.

All illustrations of an overall nature (front, top, bottom and rear views) may be of either receiver. With certain reservations, however, these illustrations will serve to represent the opposite model, since the two receivers have identical chassis and IF subassemblies. Where differences occur, as in the RF tuners, separate illustrations of the subassemblies or components for each receiver are included. Reference to the parts list (Section 5) will further clarify the identification of components for each receiver.

2. ALIGNMENT PROCEDURE. Function switch in FM position.

Alignment and adjustment of the models 1501 and 1502 receivers is accomplished according to the following outline, and should be carried out in the sequence given.

a. SECOND LIMITER ALIGNMENT

(1) C. W. METHOD

Step 1. Remove V-106.

Step 2. Set the signal generator to 21.4 mc and connect to pin 1 of V-107.

Step 3. Connect a high-resistance voltmeter (VTVM) to the second limiter grid return (TP-3).

Step 4. Set the signal generator output to produce approximately 2 volts on the VTVM.

Step 5. Detune the primary slug of T-107 counterclockwise against the stop.

Step 6. Increase the signal generator output to produce approximately the same value on the VTVM as in step 4 above.

Step 7. Adjust the secondary slug of T-107 for a maximum reading on the VTVM.

Step 8. Adjust the primary slug of T-107 for maximum reading, keeping the signal generator

Courtesy of http://BlackRadios.terryo.org

output adjusted for the same value on the VTVM as in step 4 above. DO NOT readjust the secondary for a maximum as this will result in improper adjustment.

The second limiter transformer, T-107, has a 3-db bandwidth of approximately 2.5 mc. The low circuit Q's and heavy coupling make visual alignment of this transformer desirable but not essential. The procedure outlined above will produce less than 1 db tilt in this transformer. Thus the slope is negligible over the narrow 300-kc IF bandwidth.

(2) SWEEP METHOD

Step 1. Remove V-106.

Step 2. Connect sweep generator to pin 1 of V-107.

Step 3. Connect oscilloscope to second limiter grid (TP-3).

Step 4. Adjust the primary and secondary of T-107 for maximum symmetrical output around a 21.4-mc center frequency.

b. DISCRIMINATOR ALIGHMENT.--In preparation for alignment of the discriminator transformer, T-108, remove the 6AK5 (second limiter) tube, V-108, and note the reading of the center frequency meter M-102. If it is off center, it should be centered by means of the potentiometer, R-180, located on the rear apron of the chassis. Difficulty in readily securing an exact center reading is indicative of a defective 6AL5 tube (V-109), a defective 12AU7 tube (V-117), or their associated components, and must be corrected before proceeding further. After this adjustment, replace V-108 and proceed as follows:

(1) C. W. METHOD

Step 1. Remove V-106.

Step 2. Set the signal generator to 21.4 mc and connect to pin 1 of V-107.

Step 3. Connect a high-resistance d-c voltmeter (VTVM) to the second limiter grid return (TP-3).

Step 4. Set the signal generator output to produce 2 volts on the VTVM.

Step 5. Connect the VTVM to the discriminator output lead (TP-4).

Step 6. Tune the secondary of T-108 to zero output, then counterclockwise until the VTVM shows a reading of 0.5 volt.

Step 7. Tune the primary of T-108 to give a maximum reading on the VTVM.

Step 8. Retune the secondary to produce a zero (balance) reading on the VTVM.

Step 9. Detune the signal generator above and below 21.4 mc to produce a maximum positive and negative output. These voltages should be equal and have a magnitude of approximately $\pm$ 8 volts D.C. Minor adjustment of the primary of T-308 will cause the two peak voltages to become exactly equal.

Courtesy of http://BlackRadios.terryo.org

(2) SWEEP METHOD

Step 1. Remove V-106.

Step 2. Connect the sweep generator to pin 1 of V-107.

Step 3. Connect the oscilloscope to the discriminator output lead (TP-4).

Step 4. Adjust the primary and secondary slugs of T-108 for maximum symmetrical output around a 21.4-mc center frequency. The peak-to-peak separation should be 750 kc.

c. IF ALIGNMENT

(1) C. W. METHOD.--The characteristics of cascaded, critically coupled amplifier stages are such as to make alignment difficult; however, the advantages of response stability, gain, and adjacent-channel selectivity make this type of coupling most desirable. Alignment has been kept as simple as possible by designing the three capacitively coupled double-tuned IF transformers, comprising T-101, T-102, T-103, T-104, T-105, and T-106, to have almost identical characteristics. The primary and secondary Q's have been kept high, and therefore the mutual coupling is low for the required bandwidth. These factors suggest a rather simple alignment procedure with a minimum of equipment. The resonant frequency of the primary or the secondary in the absence of the other (no coupling) is very nearly the proper tuning when the circuits are coupled. If the primary circuit is detuned, the secondary adjusted for maximum output, and the primary then retuned to maximum, the overall response will be approximately correct. This procedure is as follows:

Step 1. Remove the oscillator tube (V-104) to prevent mixing at the signal generator harmonic frequencies.

Step 2. Set the receiver dial to approximately 60 mc.

Step 3. Set the generator to 21.4 mc and connect to pin 1 of V-203.

Step 4. Connect a high-resistance d-c voltmeter (VTVM) to the second limiter grid return (TP-3).

Step 5. Set the generator output level to produce approximately 2 v on the VTVM.

Step 6. If the IF amplifier is known to be considerably out of adjustment, it will be necessary to peak T-101, T-102, T-103, T-104, T-105, and T-106 to provide adequate gain.

Step 7. Detune the primary (T-105) counterclockwise against the stop.

Step 8. Increase the signal generator output to produce 2 v on the VTVM.

Step 9. Adjust the secondary (T-106) for maximum reading on the VTVM.

Step 10. Adjust the primary (T-105) for maximum reading, keeping the signal generator output adjusted to maintain 2 v on the VTVM. DO NOT readjust the secondary (T-106) for a maximum as this

Courtesy of http://BlackRadios.terryo.org

will result in improper adjustment.

Step 11. Repeat steps 7 through 10 for T-102, T-103, and T-104. NOTE: It is not necessary to follow this sequence, as any transformer may be adjusted without affecting the others.

The alignment may be checked by varying the signal generator frequency ± 100 kc. The output voltage should be constant within ± 1 db over this range.

(2) SWEEP METHOD.--If a sweep generator and an oscilloscope are available, they may be used to check the response; however, the above procedure should first be performed and then the response checked or retouched, as required. For this test, replace the signal generator with the sweep generator and the VTVM with the oscilloscope. Slight readjustment of the transformer slugs may give some improvement in response shape.

3. BFO ADJUSTMENT. Function switch in AM position, AGC-Man. switch in "Man." position.

Step 1. Adjust IF gain as needed.

Step 2. Connect 21.4-mc CW marker to TP-201 (1501) or TP-202 (1502).

Step 3. Turn BFO on and, with pitch control on reference line, adjust T-109 for zero beat.

4. MECHANICAL ADJUSTMENTS.

a. The procedure for adjusting the dial on the Models 1501 and 1502 receivers is simple and can be done rapidly.

Step 1. Loosen both stops.

Step 2. Rotate dial to the extreme low-frequency end until the dial is stopped by the inductuner stop.

Step 3. Back up just off the inductuner stop and tighten the set screws in the dial-drive low-frequency stop.

Step 4. The dial mark just below 55 mc should line up under the indicator. (This mark is the logging-scale zero.) If this mark does not coincide with the indicator line, loosen the dial set screws, align, and re-tighten the screws.

Step 5. Rotate dial to the extreme high-frequency end until the dial is stopped by the inductuner stop.

Step 6. Back up just off the inductuner stop and tighten the set screws in the dial-drive high-frequency stop. This completes the dial adjustments.

b. LOCAL OSCILLATOR ADJUSTMENT, MODEL 1502 ONLY.--The only adjustment necessary in the local oscillator is to make the tuning dial read properly. This section may be disregarded if the dial

Courtesy of http://BlackRadios.terryo.org

is reading correctly. If a tube has been replaced and an error is noted, it may be corrected by adjustment of C-229. This adjustment should be made with a signal generator of high accuracy at 60 mc.

The high-frequency end of the dial is controlled by the location of C-230 on the end inductor L-210. The correct adjustment is made at the factory and should not require readjustment in the field.

c. LOCAL OSCILLATOR ADJUSTMENT, MODEL 1501 ONLY.--The only adjustment necessary in the local oscillator is to make the tuning dial read properly. This section may be disregarded if the dial is reading correctly. If a tube has been replaced and an error is noted, it may be corrected by adjustment of C-233. This adjustment should be made with a signal generator of high accuracy at 55 mc.

The high-frequency end of the dial is controlled by the location of C-231 on the end inductor. The correct adjustment is made at the factory and should not require readjustment in the field.

5. RF AMPLIFIER ALIGNMENT.

a. RF AMPLIFIER ALIGNMENT, MODEL 1502 ONLY.--The RF circuits are wide band compared with the IF selectivity and are designed around the highly stable Mallory S-4 spiral inductuner. The end inductors are also very stable, and therefore the unit should not require realignment. If realignment is found necessary, proceed as follows:

Step 1. Unsolder C-248 from the inductuner lug and solder to the BNC test connector.

Step 2. Connect a sweep generator with a 50-ohm source impedance to the BNC test jack.

Step 3. Connect oscilloscope to front-end test point TP-202.

Step 4. Set the dial to 70 mc.

Step 5. Adjust C-217 and C-222 for a double-tuned symmetrical response centered at 70 mc. Use 70-mc marker.

Step 6. Adjust C-220 for a 15% dip in the response.

Step 7. Repeat step 5 above.

Step 8. Set dial to 250 mc and bend end inductors L-207 and L-209 to produce a symmetrical response centered at 250 mc. Use 250-mc marker.

Step 9. Unsolder C-248 from the BNC test connector and resolder to the inductuner.

Step 10. Connect sweep generator to the antenna jack J-106 or J-201. NOTE: An accurate 50-ohm source can be achieved by using a 6-or 10-db 50-ohm pad between the sweep generator output and the receiver input.

Step 11. Set the dial to 70 mc.

Step 12. Adjust C-243 for a symmetrical response.

Courtesy of http://BlackRadios.terryo.org

Step 13. Set the dial to 250 mc and move the position of C-244 along the end portion of end inductor L-204 to produce a symmetrical round-nose response.

b. RF AMPLIFIER ALIGNMENT, MODEL 1501 ONLY.--The RF circuits are wide band compared with the IF selectivity and are designed around the highly stable Mallory S-4 spiral inductuner. The end inductors are also very stable, and therefore the unit should not require realignment. If realignment is found necessary, proceed in accordance with the following outline:

Step 1. Connect a sweep generator with a 75-ohm source impedance to J-106 or J-201.

Step 2. Connect oscilloscope to front-end test point TP-201.

Step 3. Set the tuning dial to 55 mc.

Step 4. Adjust C-222 and C-226 for a double-tuned symmetrical response centered at 60 mc. Use 60-mc marker.

Step 5. Adjust C-224 for a 3% dip.

Step 6. Repeat step 4.

Note: The RF response at the high-frequency end is controlled by rigid fixed end inductors and should not be adjusted in the field.

Courtesy of http://BlackRadios.terryo.org

VOLTAGE MEASUREMENTS

TUBE	TYPE	PIN #1	PIN #2	PIN #3	PIN #4	PIN #5	PIN #6	PIN #7	PIN #8	PIN #9
MODEL 1502 RECEIVER, FRONT END										
V-201	416B	Cathode	+6.95	Filaments	6.0VAC	Plate +	195V	Grid Ring	+6.9V	
V-202	6J4	Gnd	1.1	Gnd	6.3AC	Gnd	Gnd	130		
V-203	6AK5	-2.0	Gnd	6.3AC	Gnd	145	59	Gnd		
V-204	6AF4A	*53	Do not measure	Gnd	6.3AC	2.5	Do not measure	*53		
MODEL 1501 RECEIVER, FRONT END										
V-202	6J4	Gnd	1.5	Gnd	5.75AC	Gnd	Gnd	142		
V-203	6AK5	-4.5	Gnd	Gnd	5.75AC	147	73	Gnd		
V-204	6AF4A	*59	-.51	Gnd	5.75AC	2.3	-.51	*59		
MODELS 1501 & 1502, MAIN CHASSIS										
V-112	5R4WGY	N.C.	4.8AC 278	N.C.	262AC	N.C.	258AC	N.C.	4.8AC 278	
V-113	OA2	147	N.C.	N.C.	N.C.	147	N.C.	Gnd		
V-114	OA2	147	N.C.	N.C.	N.C.	147	N.C.	Gnd		
V-115	12AU7	143	-1.08	25	Gnd	Gnd	227	133	150	5.8AC
V-116	12AU7	102	0	6.6	Gnd	Gnd	257	.1	.95	5.8AC
V-117	12AU7	143	Gnd	7.1	Gnd	Gnd	155	0	7.1	5.8AC
V-118	12AU7	257	155	158	Gnd	Gnd	257	155	158	5.8AC
MODELS 1501 & 1502, IF AMPLIFIER CHASSIS; FUNCTION SWITCH IN FM POSITION										
V-105	6DC6	-.43	.78	6.3AC	Gnd	143	90	Gnd		
V-106	6DC6	-.43	.78	6.3AC	Gnd	143	63	Gnd		
V-107	6CB6	-.38	.14	6.4AC	Gnd	143	37	Gnd		
V-108	6AK5	-8.7	Gnd	6.4AC	Gnd	34.5	59	Gnd		
V-109	6AL5	-4.3	-5.9	Gnd	4.5AC	Gnd	Gnd	-8.5		
V-110	6AL5	Gnd	N.C.	Gnd	5.8AC	N.C.	N.C.	-.46		

Table 4-1. Voltage Measurements, Models 1501 & 1502

Courtesy of http://BlackRadios.terryo.org

TUBE	TYPE	PIN #1	PIN #2	PIN #3	PIN #4	PIN #5	PIN #6	PIN #7	PIN #8	PIN #9
MODELS 1501 & 1502, IF AMPLIFIER CHASSIS; FUNCTION SWITCH IN AM POS.										
V-105	6DC6	-.43	.77	6.2AC	Gnd	143	90	Gnd		
V-106	6DC6	-.43	.77	6.2AC	Gnd	143	63	Gnd		
V-107	6CB6	-.18	.36	6.4AC	Gnd	143	62	Gnd		
V-108	6AK5	-4.2	Gnd	6.4AC	Gnd	33.5	62	Gnd		
V-109	6AL5	-.19	-5.9	Gnd	4.5AC	Gnd	Gnd	-8.3		
BFO SWITCH ON										
V-111	6CB6	-10.8	0	5.6AC	Gnd	143	125	Gnd		

Table 4-1. Voltage Measurements, Models 1501 & 1502 (Continued)

Notes: Line voltage 115VAC, 60 cps; S-105 set to 115V; dial tuned to 220 mc; no signal input; squelch control and audio gain control full CCW; AGC on; BFO off except for measurements on V-111; R-180 discriminator tuning meter balance set in accordance with procedure shown in section 4; filament voltages measured between tube pin and chassis except V-201; DC voltages taken with an 11-megohm VTVM; all voltages measured with respect to Gnd.

*Use 1-meg isolating resistor between tube pin and meter probe.

Courtesy of http://BlackRadios.terryo.org

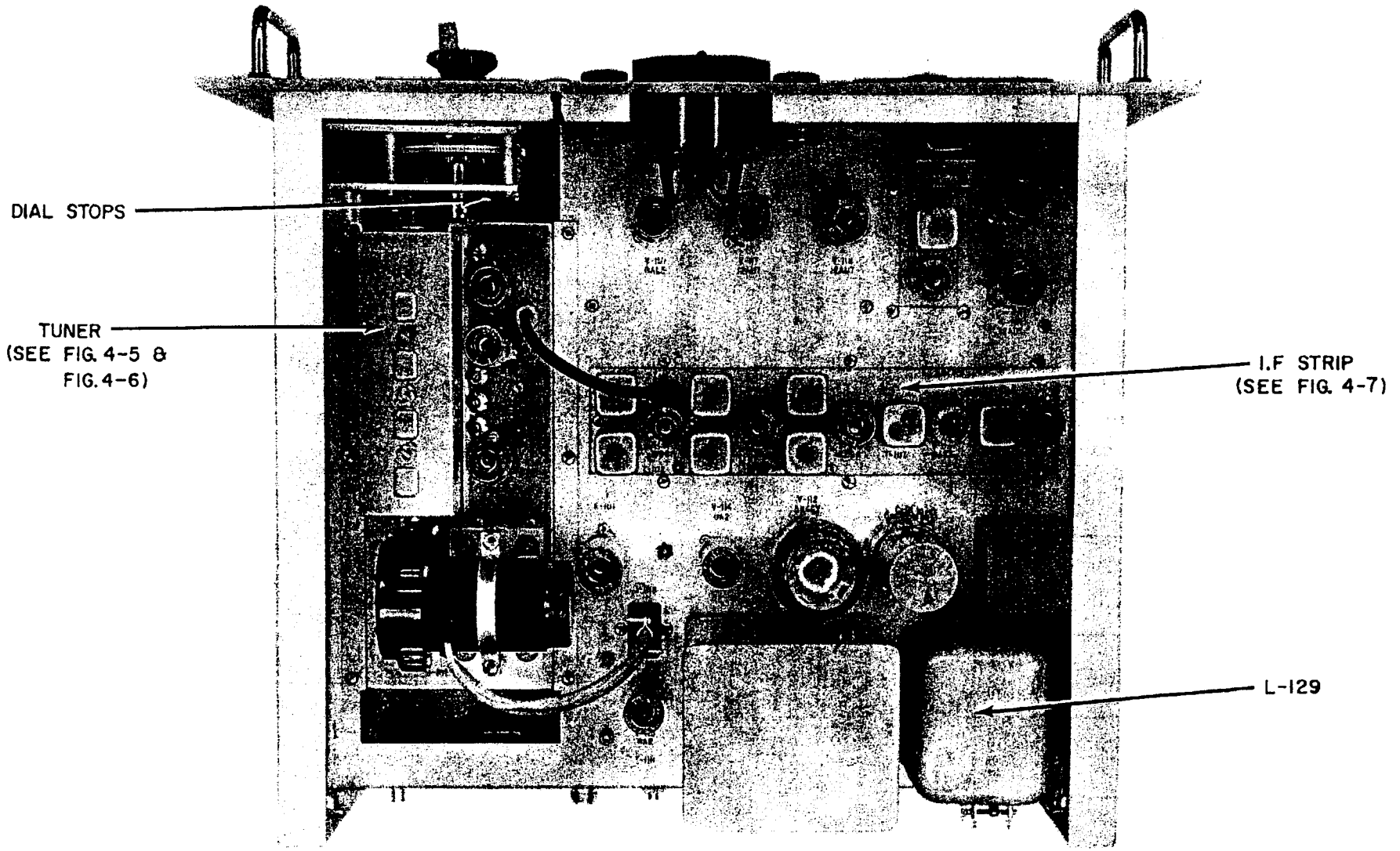

Fig. 4-1. Model 1502 Receiver, Top View (Dust Cover Removed)

Courtesy of http://BlackRadios.terryo.org

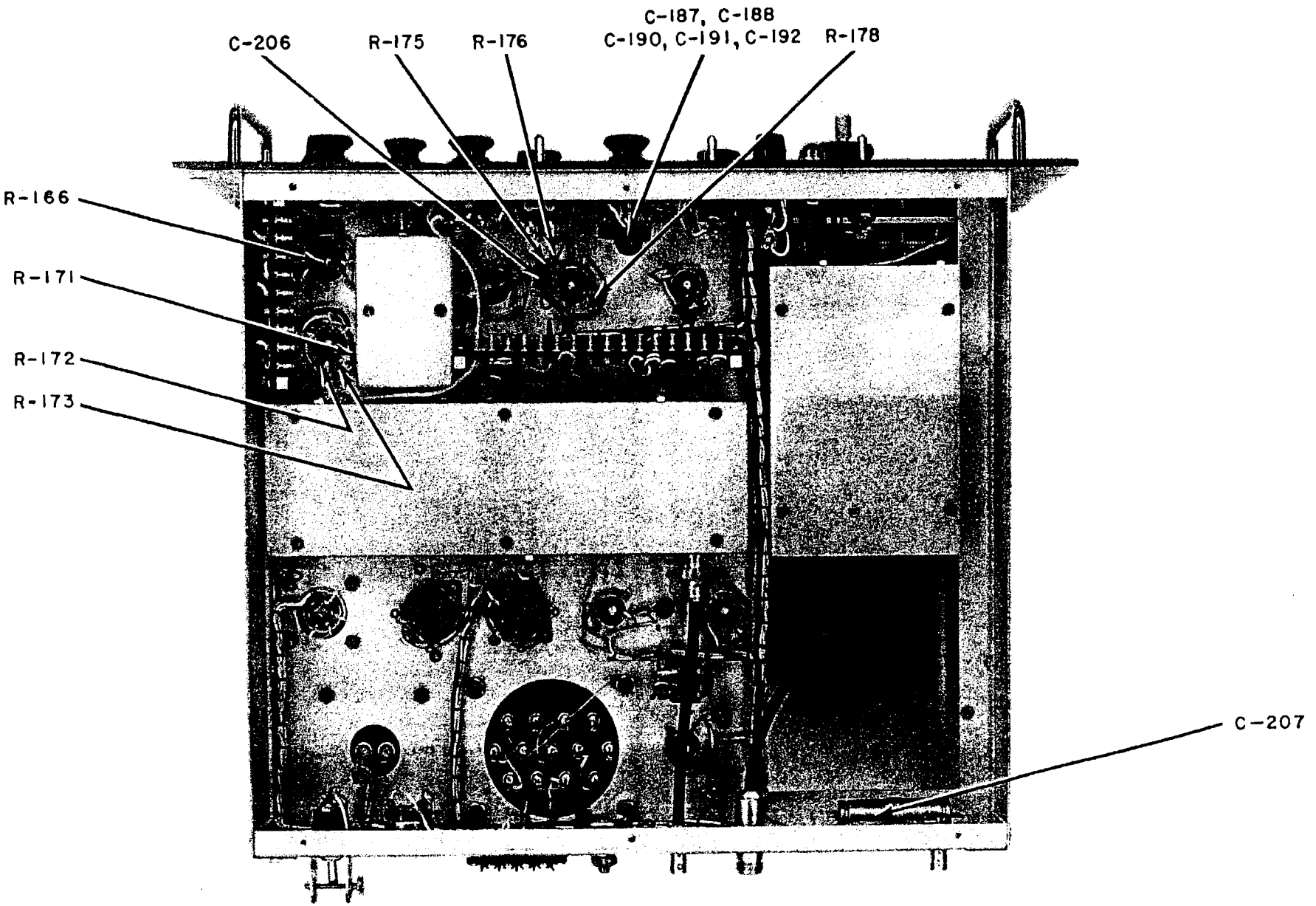

Fig. 4-2. Model 1501 Receiver, Bottom View (Dust Cover Removed)

Courtesy of http://BlackRadios.terryo.org

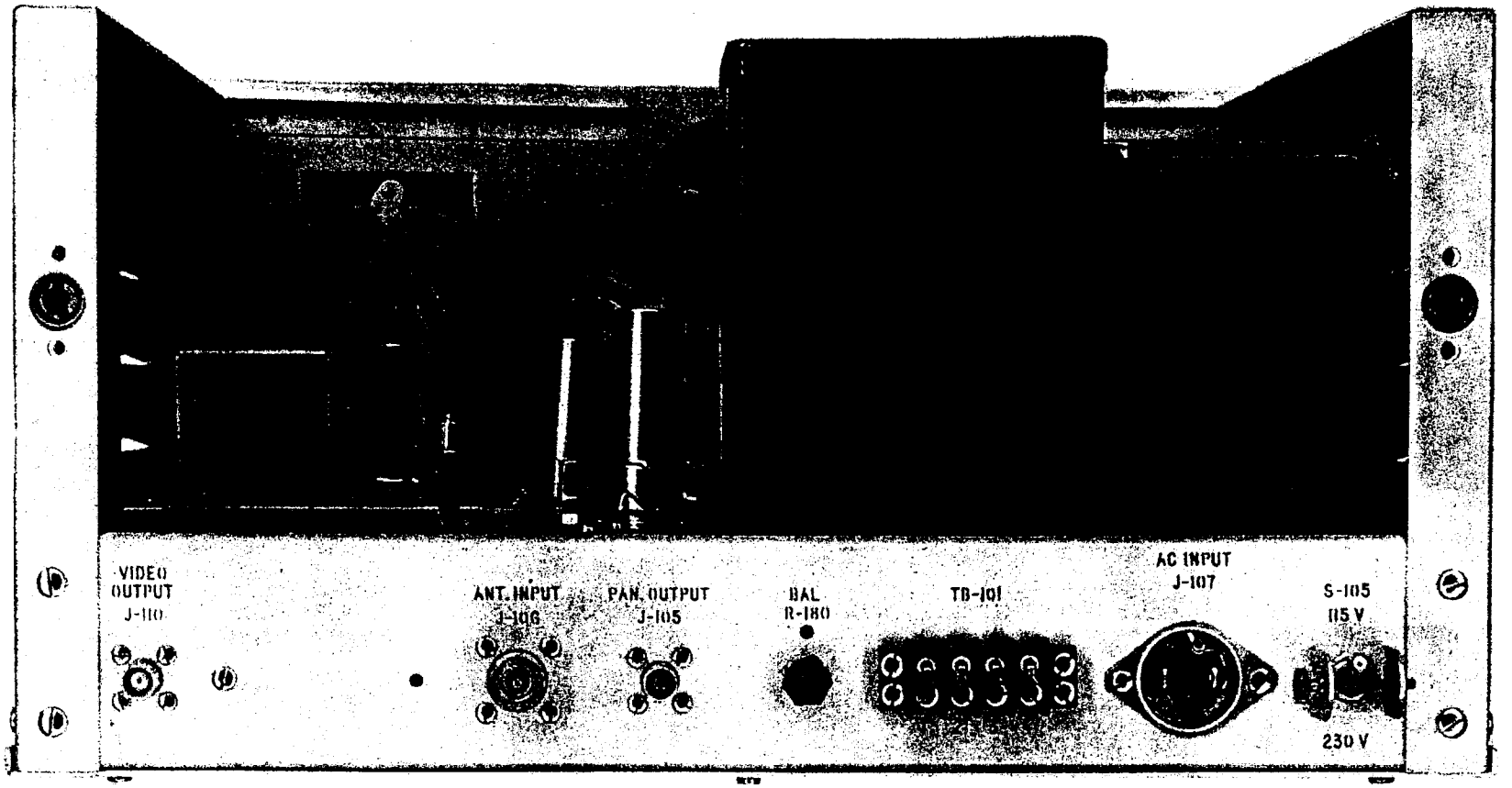

Fig. 4-3. Model 1501 Receiver, Rear View (Dust Cover Removed)

Courtesy of http://BlackRadios.terryo.org

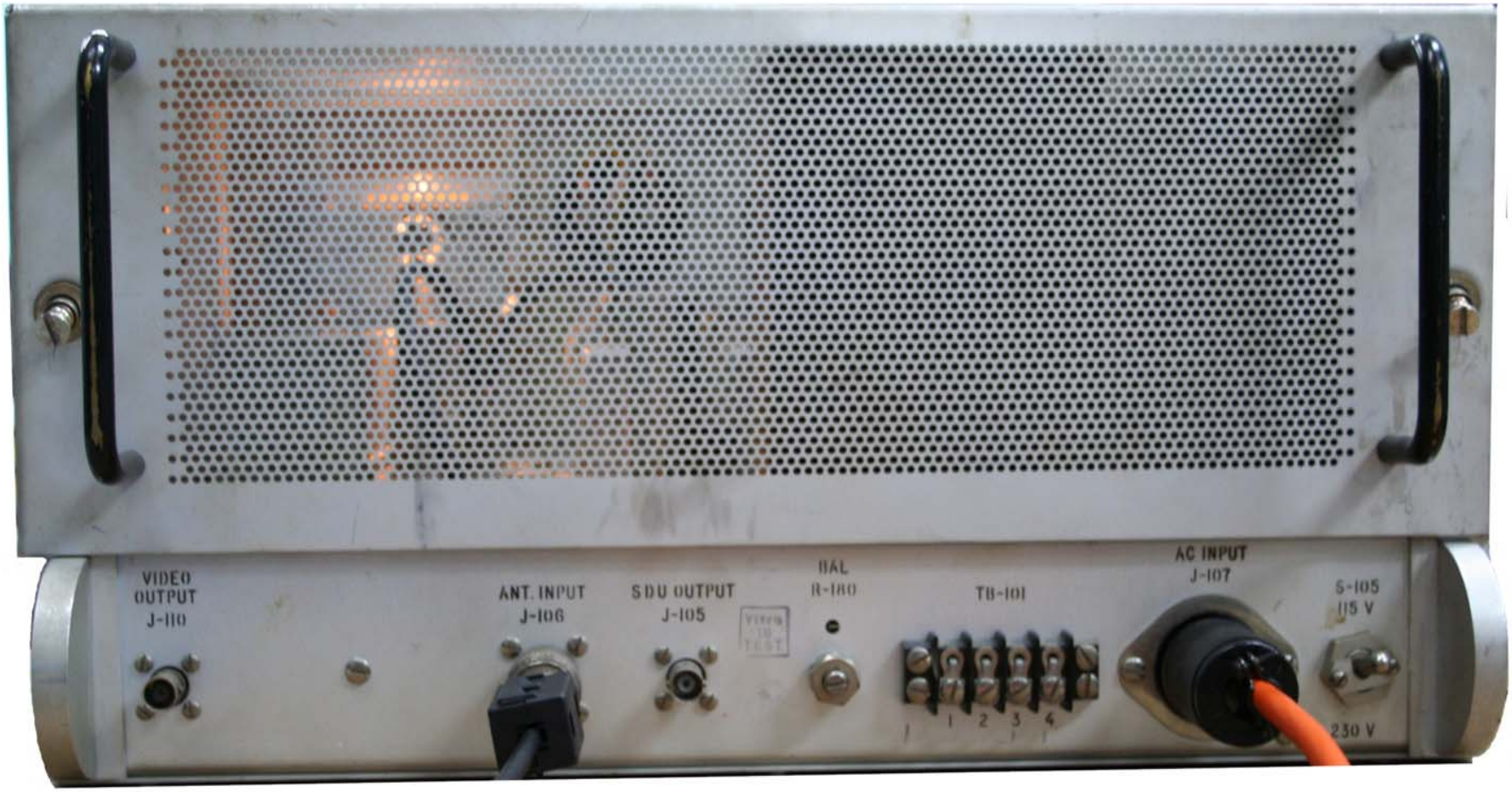

Rear View 1501A

Courtesy of http://BlackRadios.terryo.org

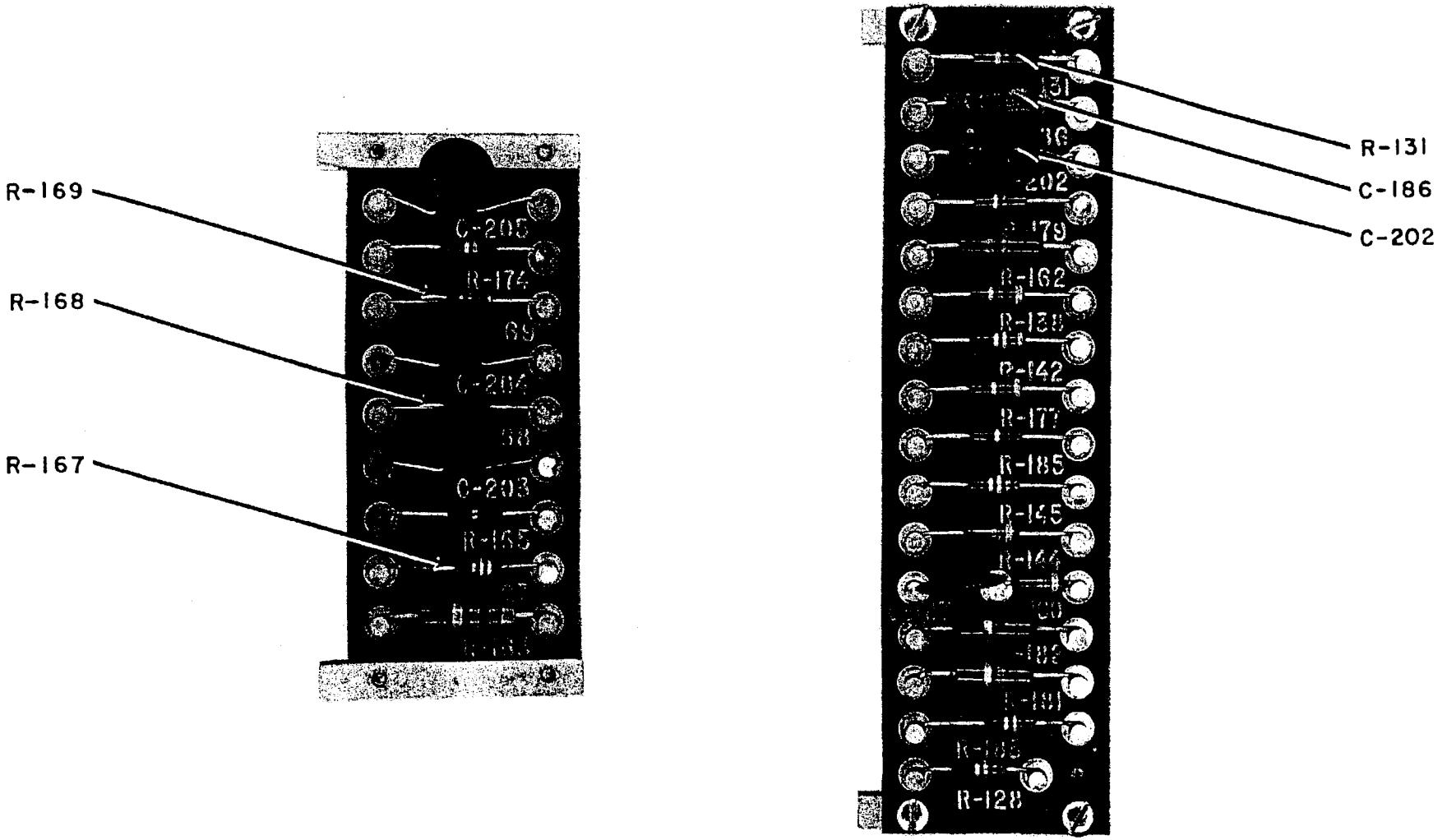

Fig. 4-4. Resistor Boards Used in Models 1501 - 1502 Receivers

Courtesy of http://BlackRadios.terryo.org

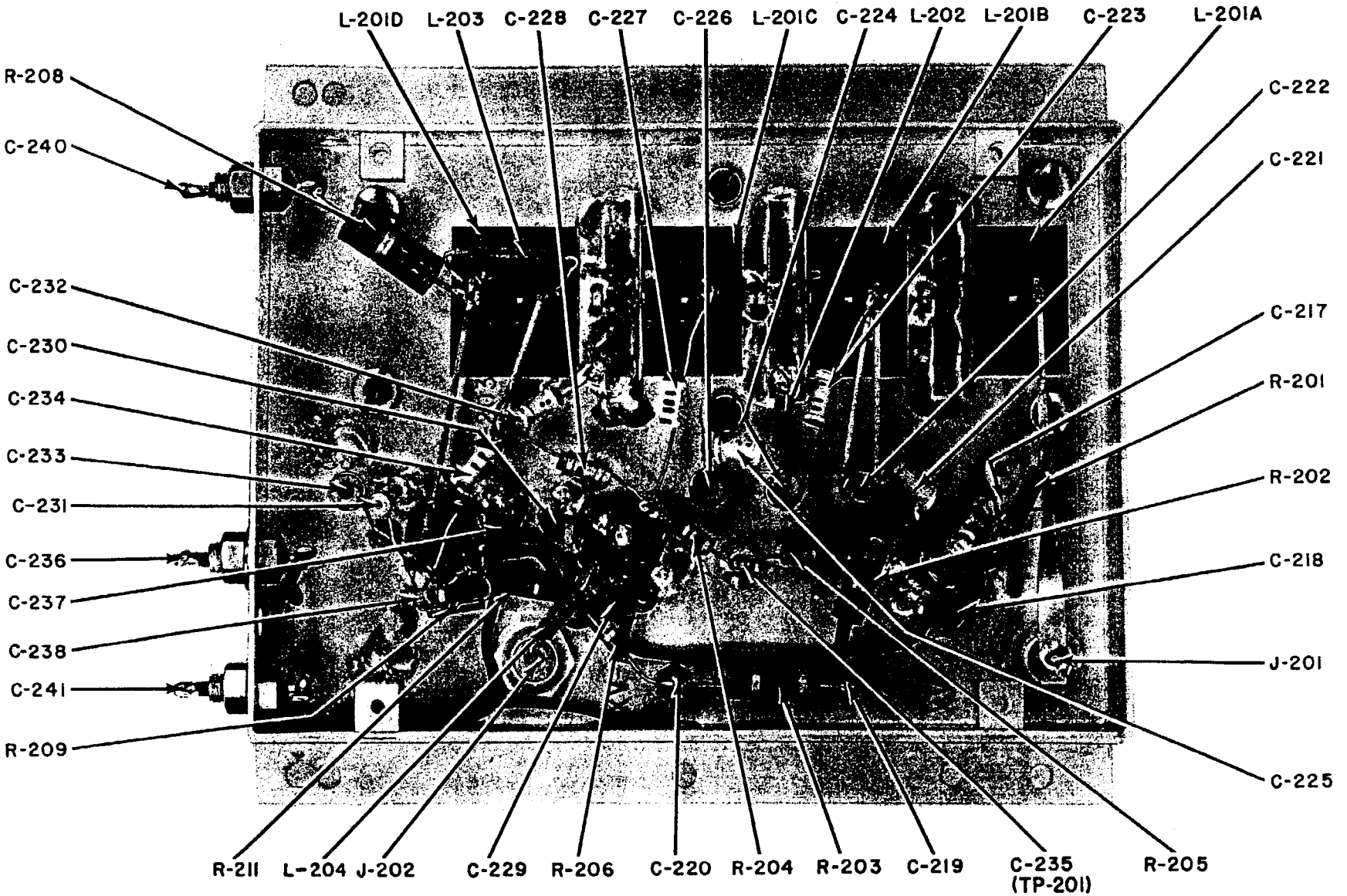

Fig. 4-5. Tuner, Model 1501 Receiver, Bottom View (Dust Cover Removed)

Courtesy of http://BlackRadios.terryo.org

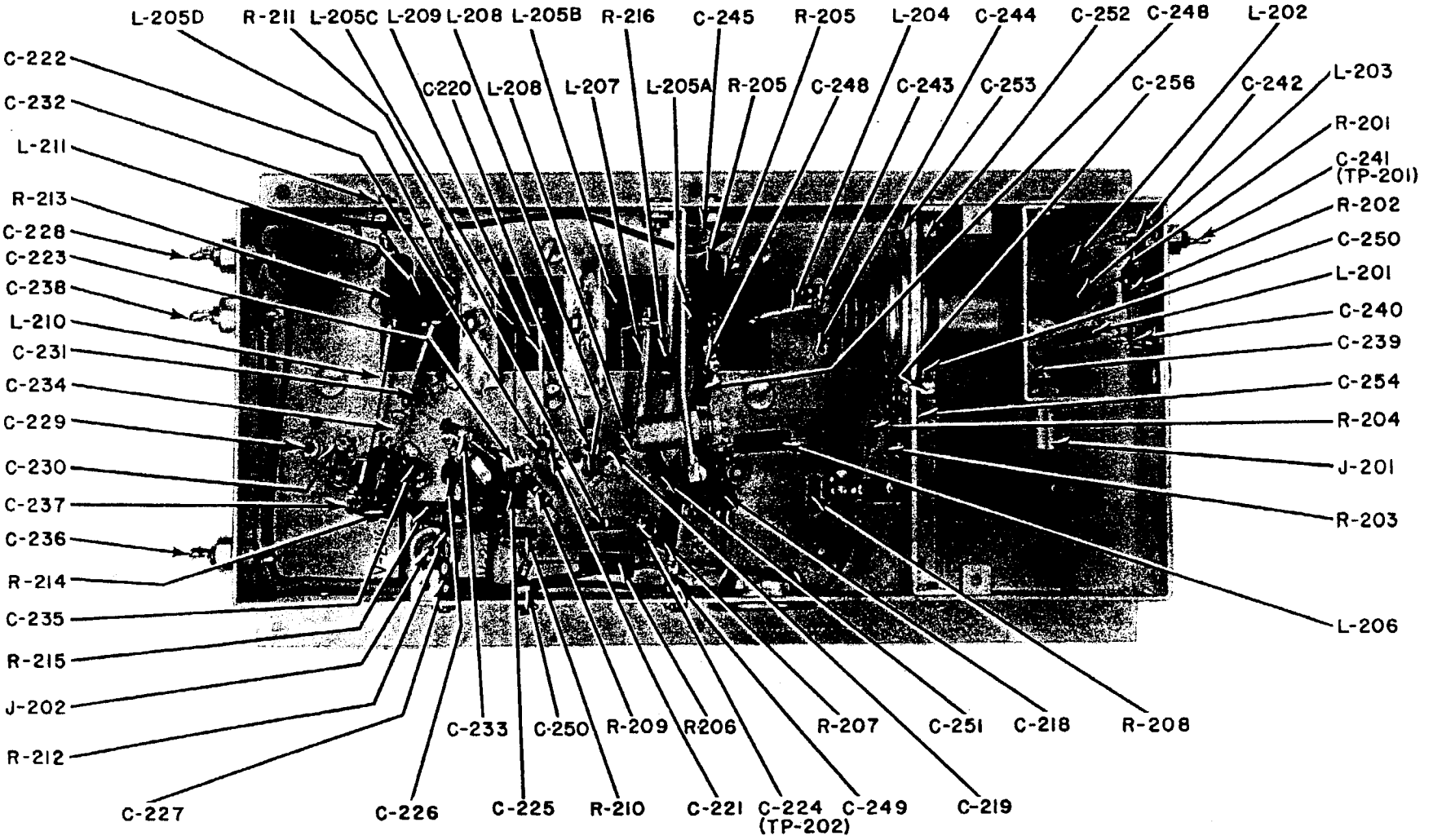

Fig. 4-6. Tuner, Model 1502 Receiver, Bottom View (Dust Cover Removed)

Courtesy of http://BlackRadios.terryo.org

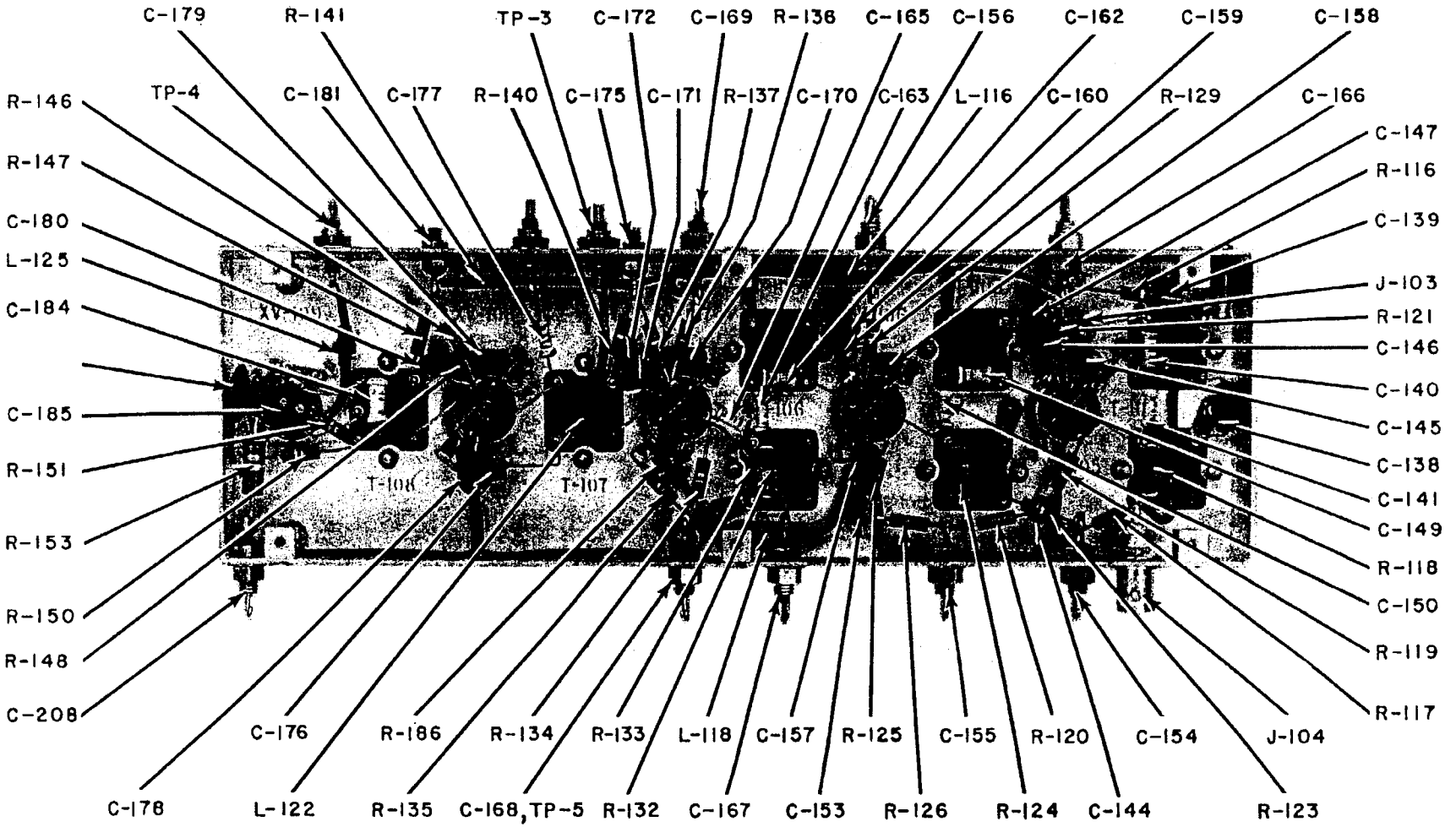

Fig. 4-7. IF Strip, Models 1501-1502 Receiver, Bottom View (Dust Cover Removed)

Courtesy of http://BlackRadios.terryo.org

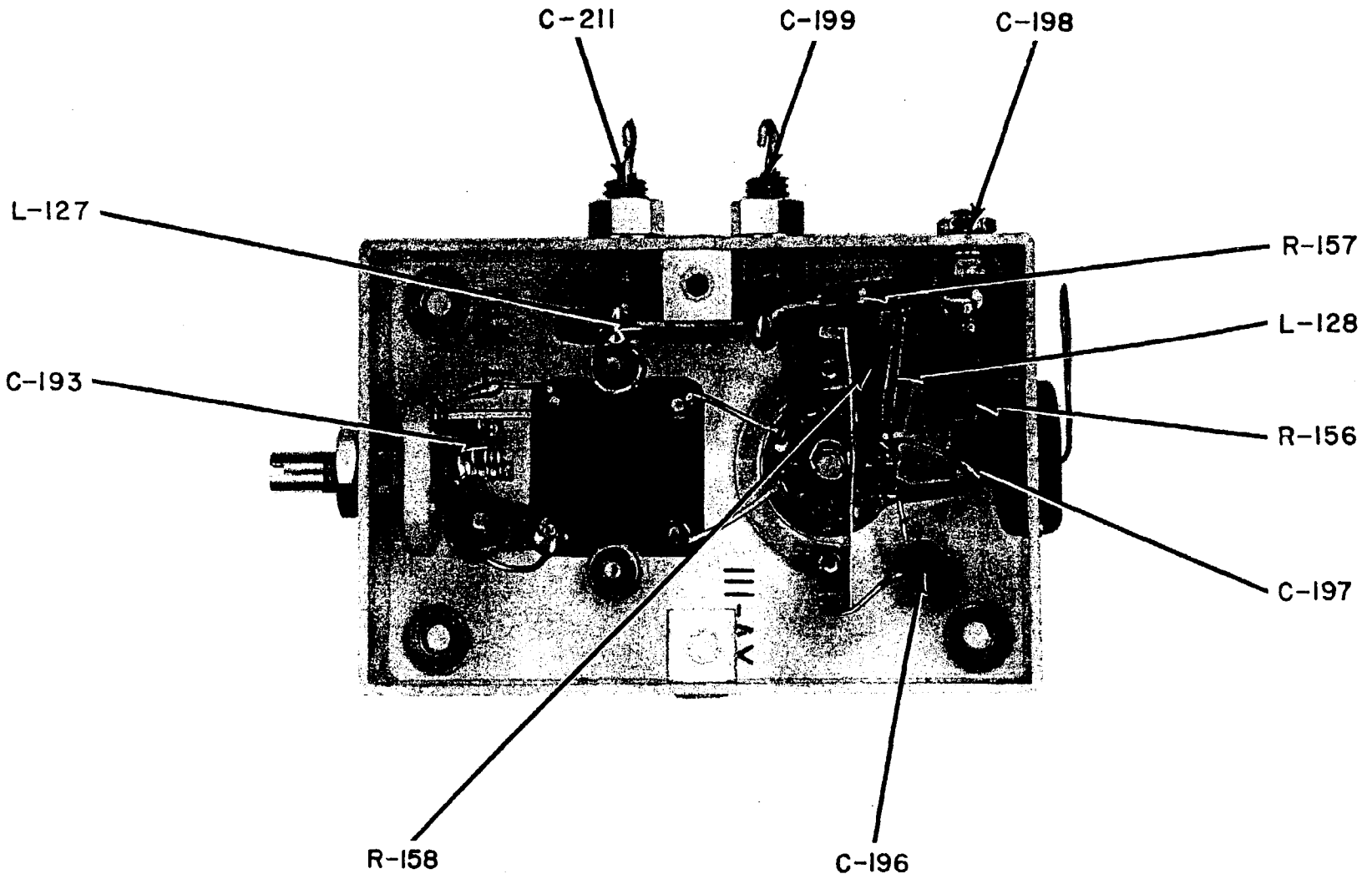

Fig. 4-8. BFO Unit, Models 1501-1502 Receivers, Bottom View

Courtesy of http://blackfladios.terrys.org

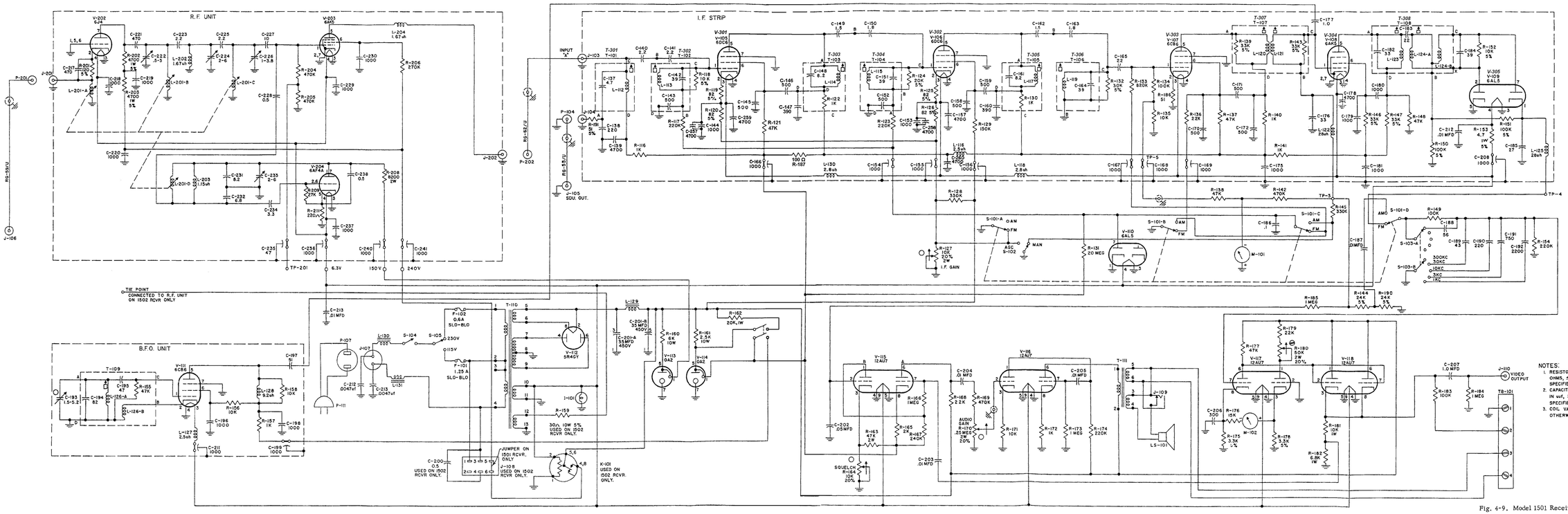

NOTES:

1. RESISTORS ARE FIXED, MEASURED IN OHMS, ± 10% 1/2W UNLESS OTHERWISE SPECIFIED.
2. CAPACITORS ARE FIXED, B MEASURED IN uuf, 500V UNLESS OTHERWISE SPECIFIED.
3. COIL VALUES ARE IN uh UNLESS OTHERWISE SPECIFIED.

Fig. 4-9. Model 1501 Receiver, Schematic Diagram

Courtesy of http://BlackRadios.terryo.org

SECTION 5

PARTS LIST, MODELS 1501 & 1502 SPECIAL PURPOSE RECEIVERS

When ordering replacement parts, give the equipment name and model number, and the symbol number and description of each item ordered.

Replacement parts which will be supplied against an order may not be exact duplicates of the original parts. However, only minor differences in the electrical or mechanical characteristics will be involved and, consequently, will in no way impair the operation of the equipment.

Courtesy of http://BlackRadios.terryo.org

Symbol No. 1501	Symbol No. 1502	Description
	B-101	Blower: Centrifugal, Air Marine part no. A-15BF-43
C-101 thru C-136	C-101 thru C-136	Not used
C-137	C-137	Capacitor: Ceramic, NPO, uninsulated, 4.7 uuf ± 0.5 uuf, 500V
C-138	C-138	Capacitor: Mica, 220 uuf ± 5%, 300 V
C-139	C-139	Capacitor: Ceramic, disc, 4700 uuf MRC, 500V
C-140	C-140	Capacitor: Ceramic, NPO, uninsulated, 2.0 uuf ± 0.25 uuf, 500V
C-141	C-141	Capacitor: Ceramic, NPO, uninsulated, 1.5 uuf ± 0.25 uuf, 500V
C-142	C-142	Capacitor: Ceramic, N030, uninsulated, 39 uuf, ±5%, 500V
C-143	C-143	Capacitor: Ceramic, GP2, insulated, 500 uuf ± 20%, 500V
C-144	C-144	Capacitor: Ceramic, Button, 1000 uuf MRC, 500V
C-145, 146, 147	C-145, 146, 147	Capacitor: Ceramic, GP2, insulated, 500 uuf ±20%, 500V
C-148	C-148	Capacitor: Ceramic, NPO, uninsulated, 8.2 uuf ± 0.5 uuf, 500V
C-149, 150	C-149, 150	Capacitor: Ceramic, NPO, uninsulated, 1.5 uuf, ± 0.25 uuf, 500V
C-151	C-151	Capacitor: Ceramic, N030, uninsulated, 39 uuf ± 5%, 500V
C-152	C-152	Capacitor: Ceramic, GP2, insulated, 500 uuf ± 20%, 500V
C-153	C-153	Capacitor: Ceramic, button, 1000 uuf MRC, 500V
C-154, 155, 156	C-154, 155, 156	Capacitor: Ceramic, feed-thru, 1000 mmf MRC, 500V
C-157	C-157	Capacitor: Ceramic, disc, 4700 uuf MRC, 500V
C-158, 159, 160	C-158, 159, 160	Capacitor: Ceramic, GP2, insulated, 500 uuf ± 20%, 500V
C-161	C-161	Capacitor: Ceramic, NPO, uninsulated, 8.2 uuf ± 0.5 uuf, 500V
C-162, 163	C-162, 163	Capacitor: Ceramic, NPO, uninsulated, 1.5 uuf ± 0.25 uuf, 500V
C-164	C-164	Capacitor: Ceramic, N030, uninsulated, 39 uuf ± 5%, 500V
C-165	C-165	Capacitor: Ceramic, NPO, uninsulated, 22 uuf ± 5%, 500V
C-166, 167, 168, 169	C-166, 167, 168, 169	Capacitor: Ceramic, feed-thru, 1000 uuf MRC, 500V
C-170, 171, 172	C-170, 171, 172	Capacitor: Ceramic, GP2, insulated, 500 uuf ± 20%, 500V
C-173	C-173	Not used
C-174	C-174	Not used
C-175	C-175	Capacitor: Ceramic, button, 1000 uuf MRC, 500V
C-176	C-176	Capacitor: Mica, 33 mmf ± 5%, 300V
C-177	C-177	Capacitor: Ceramic, NPO, insulated, 1.0 uuf ± 0.25 uuf, 500V
C-178	C-178	Capacitor: Ceramic, disc, 4700 uuf MRC, 500V
C-179, 180	C-179, 180	Capacitor: Ceramic, 1000 uuf ± 20%, 600V
C-181	C-181	Capacitor: Ceramic, button, 1000 uuf MRC, 500V
C-182	C-182	Capacitor: Ceramic, NPO, uninsulated, 33 uuf ± 10%, 500V
C-183	C-183	Capacitor: Ceramic, NPO, uninsulated, 22 uuf, ± 5%, 500V
C-184	C-184	Capacitor: Ceramic, N030, uninsulated, 39 uuf ± 5%, 500V
C-185	C-185	Capacitor: Mica, 27 uuf ± 5%, 300V
C-186	C-186	Capacitor: Paper, 0.1 uf ± 20%, 200V
C-187	C-187	Capacitor: Ceramic, disc, .01 mf MRC, 500V
C-188	C-188	Capacitor: Mica, 56 uuf ± 5%, 300V
C-189	C-189	Capacitor: Mica, 43 uuf ± 5%, 300V
C-190	C-190	Capacitor: Mica, 200 uuf ± 5%, 300V
C-191	C-191	Capacitor: Mica, 750 uuf ± 5%, 300V
C-192	C-192	Capacitor: Paper, 2200 uuf ± 10%, 600V
C-193	C-193	Capacitor: Air dielectric, plate meshing, 1.5 uuf to 5.2 uuf, 1250V
C-194	C-194	Capacitor: Mica, 82 uuf ± 5%, 300V
C-195	C-195	Capacitor: Ceramic, NPO, uninsulated, 47 uuf ± 10%, 500V
C-196	C-196	Capacitor: Ceramic, disc, 1000 uuf MRC, 500V
C-197	C-197	Capacitor: Mica, 51 uuf ± 5%, 300V
C-198	C-198	Capacitor: Ceramic, button, 1000 uuf MRC, 500V
C-199	C-199	Capacitor: Ceramic, feed-thru, 1000 uuf MRC, 500V
C-200		Not used
	C-200	Capacitor: Paper, oil filled, 0.5 uf ± 10%, 400V
C-201A, B	C-201A, B	Capacitor: Electrolytic, 2 section, 35 uf each section, 450V each section
C-202	C-202	Capacitor: Paper, .05 uf ± 20%, 200V
C-203, 204, 205	C-203, 204, 205	Capacitor: Ceramic, disc, .01 uf MRC, 500V

Courtesy of http://BlackRadios.terryo.org

Symbol No.		Description
1501	1502	
C-206	C-206	Capacitor: Mica, 300 uuf ± 5%, 300V
C-207	C-207	Capacitor: Paper, oil filled, 1 mf +30% -20%, 400 V
C-208	C-208	Capacitor: Ceramic, feed-thru, 1000 mmf MRC, 500V
C-209 thru C-216	C-209 thru C-216	Not used
C-217		Capacitor: Ceramic, GP2, insulated, 470 uuf ± 10%, 500V
	C-217	Capacitor: Ceramic, trimmer, 0.5-3 mmf, 500V
C-218	C-218	Capacitor: Ceramic, disc, 1000 uuf MRC, 500V
C-219		Capacitor: Ceramic, button, 1000 uuf MRC, 500V
	C-219	Capacitor: Ceramic, NPO, uninsulated, 2.0 mmf ± 0.25 uuf, 500V
C-220		Capacitor: Ceramic, button, 1000 uuf MRC, 500V
	C-220	Capacitor: Ceramic, trimmer, 2-6 uuf, 500V
C-221		Capacitor: Ceramic, GP2, Insulated, 470 uuf ± 10%, 500V
	C-221	Capacitor: Ceramic, NPO, uninsulated, 2.0 uuf ± 0.25 uuf, 500V
C-222		Capacitor: Ceramic, trimmer, 0.5-3 uuf, 500V
	C-222	Capacitor: Ceramic, trimmer, 1-3.8 uuf, 500V
C-223		Capacitor: Ceramic, NPO, uninsulated, 2.2 uuf ± 0.25 uuf, 500V
	C-223	Capacitor: Ceramic, NPO, uninsulated, 10 uuf ± 1 uuf, 500V
C-224		Capacitor: Ceramic, trimmer, 2-6 uuf, 500V
	C-224	Capacitor: Ceramic, feed-thru, 47 uuf ± 10%, 500V
C-225		Capacitor: Ceramic, NPO, uninsulated, 2.2 uuf ± 0.25 uuf, 500V
	C-225	Capacitor: Ceramic, disc, 1000 uuf MRC, 500V
C-226		Capacitor: Ceramic, trimmer, 1-3.8 uuf, 500V
	C-226	Capacitor: Ceramic, disc, 1000 uuf MRC, 500V
C-227		Capacitor: Ceramic, NPO, uninsulated, 10 uuf ± 1 uuf, 500V
	C-227	Capacitor: Ceramic, button, 1000 uuf MRC, 500V
C-228		Capacitor: Ceramic, NPO, uninsulated, 0.5 uuf ± 0.1 uuf, 500V
	C-228	Capacitor: Ceramic, feed-thru, 1000 uuf MRC, 500V
C-229		Capacitor: Ceramic, disc, 1000 uuf MRC, 500V
	C-229	Capacitor: Ceramic, trimmer, 2-6 uuf, 500V
C-230		Capacitor: Ceramic, disc, 1000 uuf MRC, 500V
	C-230	Capacitor: Ceramic, NPO, uninsulated, 8.2 uuf ± 0.5 uuf, 500V
C-231		Capacitor: Ceramic, NPO, uninsulated, 8.2 uuf ± 0.5 uuf, 500V
	C-231	Capacitor: Ceramic, NPO, uninsulated, 6.8 uuf ± 0.5 uuf, 500V
C-232		Capacitor: Ceramic, NPO, uninsulated, 6.8 uuf ± 0.5 uuf, 500V
	C-232	Capacitor: Ceramic, button, 1000 uuf MRC, 500V
C-233		Capacitor: Ceramic, trimmer, 2-6 uuf, 500V
	C-233	Capacitor: Ceramic, NPO, uninsulated, 0.5 uuf ± 0.25 uuf, 600V
C-234	C-234	Capacitor: Ceramic, NPO, uninsulated, NPO, 3.3
C-235		Capacitor: Ceramic, feed-thru, 47 uuf MRC, 500V
	C-235	Capacitor: Ceramic, disc, 1000 uuf MRC, 500V
C-236	C-236	Capacitor: Ceramic, feed-thru, 1000 uuf MRC, 500V
C-237		Capacitor: Ceramic, disc, 1000 uuf MRC, 500V
	C-237	Capacitor: Ceramic, NPO, uninsulated, 0.5 uuf ± 0.25 uuf, 600V
C-238		Capacitor: Ceramic, NPO, uninsulated, 0.5 uuf ± 0.1 uuf, 500V
	C-238	Capacitor: Ceramic, feed-thru, 1000 uuf MRC, 500V
C-239		Not used
	C-239	Capacitor: Ceramic, disc, 1000 uuf MRC, 500V
C-240		Capacitor: Ceramic, feed-thru, 1000 uuf MRC, 500V
	C-240	Capacitor: Ceramic, button, 1000 uuf MRC, 500V
C-241	C-241	Capacitor: Ceramic, feed-thru, 1000 uuf MRC, 500V
	C-242	Capacitor: Ceramic, feed-thru, 1000 uuf MRC, 500V
	C-243	Capacitor: Ceramic, trimmer, 0.5-3 uuf, 500V
	C-244	Capacitor: Ceramic, NPO, uninsulated, 6.8 uuf ± 0.5 uuf, 500V
	C-245	Capacitor: Ceramic, button, 1000 uuf MRC, 500V
	C-246	Capacitor: Ceramic, NPO, uninsulated, 33 uuf ± 10%, 500V
	C-247	Capacitor: Ceramic, NPO, uninsulated, 22 uuf ± 5%, 500V
	C-248	Capacitor: Ceramic, insulated, 1000 uuf MRC, 500V
	C-249, 250	Capacitor: Ceramic, button, 1000 uuf MRC, 500V

Courtesy of http://BlackRadios.terryo.org

Symbol No.		Description
1501	1502	
	C-251	Capacitor: Ceramic, GP2, insulated, 500 uuf ± 20%, 500V
	C-252, 253, 254, 255, 256	Capacitor: Ceramic, button, 200 uuf ± 10%, 500V
F-101	F-101	Fuse: 1.25 amp. 250V, 3AG, slo blo
F-102	F-102	Fuse: 0.6 amp, 250V, 3AG, slo blo
I-101		Lamp: Incandescent, 6 to 8 V, 0.15 amp
J-101, 102	J-101, 102	Not used
J-103	J-103	Connector: Receptacle, type no. MX-1530
J-104	J-104	Connector: Receptacle, type no. UG-625A/U
J-105	J-105	Connector: Receptacle, type no. UG-262/U
J-106	J-106	Connector: Receptacle, 1 contact, accommodates RG-55/U and RG-58/U coaxial cable
J-107	J-107	Connector: Receptacle, 2 contacts, 10A 250V, 15A 125V
J-108	J-108	Connector: Receptacle, 6 contacts, one connector mating end.
J-109	J-109	Jack: Telephone, type no. JJ-089
J-110	J-110	Connector: Receptacle, type no. UG-290/U
J-201, 202	J-201, 202	Connector: Receptacle, type no. UG-625A/U
	K-101	Relay: Thermal, SPST, N.O. 2 amp 115VAC
L-101 thru L-111	L-101 thru L-111	Not used
L-112	L-112	Coil: Nems-Clarke part/dwg no. A-14, 792 (not separately replaceable)
L-113	L-113	Coil: Nems-Clarke Part/dwg no. A-14, 791 (not separately replaceable)
L-114	L-114	Coil: Nems-Clarke part/dwg no. A-14, 984 (not separately replaceable)
L-115	L-115	Coil: Nems-Clarke part/dwg. no. A-14, 791 (not separately replaceable)
L-116	L-116	Coil: R. F., 2.5 uh, Nems-Clarke part/dwg no. A-14, 805
L-117	L-117	Coil: Nems-Clarke part/dwg. no. A-14, 984 (not separately replaceable)
L-118	L-118	Coil: R. F., 2.5 uh, Nems-Clarke part/dwg no. A-14, 805
L-119	L-119	Coil: Nems-Clarke part/dwg no. A-14, 792 (not separately replaceable)
L-120	L-120	Coil: Nems-Clarke part/dwg no. A-14, 789 (Not separately replaceable)
L-121	L-121	Coil: Nems-Clarke part/dwg no. A-14, 790 (not separately replaceable)
L-122	L-122	Coil: R. F., 28 uh, Nems-Clarke part/dwg no. A-14, 804
L-123	L-123	Coil: Nems-Clarke part/dwg no. A-14, 788 (not separately replaceable)
L-124A, B	L-124A, B	Coil: Nems-Clarke part/dwg no. A-14, 787 (not separately replaceable)
L-125	L-125	Coil: R. F., 28 uh, Nems-Clarke part/dwg no. A-14, 804
L-126	L-126	Coil: Nems-Clarke part/dwg no. A-14, 786 (not separately replaceable)
L-127	L-127	Coil: R. F., 2.5 uh, Nems-Clarke part/dwg no. A-14, 805
L-128	L-128	Coil: R. F., 9.2 uh, Nems-Clarke part/dwg no. A-14, 807
L-129	L-129	Reactor: Fixed inductance, single coil, 12 hy, 150 ma DC
L-201A, B, C, D		Inductuner: Spiral, Mallory type S-4
	L-201	Coil: R. F., 0.72 uh, Nems-Clarke part/dwg no. A-14, 734
L-202		Coil: R. F., 1.67 uh, Nems-Clarke part/dwg no. A-14, 737
	L-202	Coil: R. F., 14 uh, Nems-Clarke part/dwg no. A-14, 735
L-203		Coil: R. F., 1.15 uh, Nems-Clarke part/dwg no. A-14, 806
	L-203	Coil: R. F., 14 uh, Nems-Clarke part/dwg no. A-14, 735
L-204		Coil: R. F., 1.67 uh, Nems-Clarke part/dwg no. A-14, 737
	L-204	Inductance: Fixed brass, silver plated strap, 3/4" lg x .040" wide x 1/4" thick
	L-205A, B, C, D	Inductuner: Spiral, Mallory type S-4

Courtesy of http://BlackRadios.terryo.org

Symbol No.		Description
1501	1502	
	L-206	Coil: R. F., 14 uh, Nems-Clarke part/dwg no. A-14, 735
	L-207	Inductance: Adjustable
	L-208	Coil: R. F., 1.67 uh, Nems-Clarke part/dwg no. A-14, 737
	L-209	Inductance: Adjustable
	L-210	Inductance: Fixed
	L-211	Coil: R. F., 1.15 uh, Nems-Clarke part/dwg no. A-14, 806
LS-101	LS-101	Loudspeaker: Dynamic, RCA part/dwg no. XS 7874A
M-101	M-101	Ammeter: 2-1/2" round, 0-50 ma DC scale, hermetically sealed
M-102	M-102	Ammeter: 2-1/2" round, 100-0-100 ma DC scale, hermetically sealed
O-101 thru O-106	O-101 thru O-106	Knob: Set screw type, positive gripping surface
O-107		Dial: Control, knob type, Nems-Clarke part/dwg no. A-14, 803
P-101, 102, 103	P-101, 102, 103	Not used
P-104	P-104	Connector: Plug, type no. UG-260/U
P-105	P-105	Not used
P-106	P-106	Connector: Plug, type no. UG-536/U
P-107	P-107	Connector: Plug, molded, part of power cord
P-108		Not used
	P-108	Connector: Plug, 6 contact
P-109	P-109	Not used
P-110	P-110	Connector: Plug, type no. UG-260/U
P-111	P-111	Connector: Plug, molded, part of power cord
R-101 thru R-115	R-101 thru R-115	Not used
R-116	R-116	Resistor: Fixed, composition, 1K ± 10%, 1/2 W
R-117	R-117	Resistor: Fixed, composition, 220K ± 10%, 1/2 W
R-118	R-118	Resistor: Fixed, composition, 22K ± 5%, 1/2 W
R-119, 120	R-119, 120	Resistor: Fixed, composition, 82 ohms ± 5%, 1/2 W
R-121	R-121	Resistor: Fixed, composition, 47K ± 10%, 1/2 W
R-122	R-122	Resistor: Fixed, composition, 1K ± 10%, 1/2 W
R-123	R-123	Resistor: Fixed, composition, 220K ± 10%, 1/2 W
R-124	R-124	Resistor: Fixed, composition, 20K ± 5%, 1/2 W
R-125, 126	R-125, 126	Resistor: Fixed, composition, 82 ohms ± 5%, 1/2 W
R-127	R-127	Resistor: Variable, composition, 10K ± 20%, 2 W
R-128	R-128	Resistor: Fixed, composition, 330K ± 10%, 1/2 W
R-129	R-129	Resistor: Fixed, composition, 150K ± 10%, 1/2 W
R-130	R-130	Resistor: Fixed, composition, 1K ± 10%, 1/2 W
R-131	R-131	Resistor: Fixed, composition, 20 meg ± 10%, 1/2 W
R-132	R-132	Resistor: Fixed, composition, 30K ± 5%, 1/2 W
R-133	R-133	Resistor: Fixed, composition, 820K ± 10%, 1/2 W
R-134	R-134	Resistor: Fixed, composition, 100K ± 10%, 1/2 W
R-135	R-135	Resistor: Fixed, composition, 10K ± 10%, 1/2 W
R-136	R-136	Resistor: Fixed, composition, 22K ± 10%, 1/2 W
R-137, 138	R-137, 138	Resistor: Fixed, composition, 47K ± 10%, 1/2 W
R-139	R-139	Resistor: Fixed, composition, 33K ± 5%, 1/2 W
R-140, 141	R-140, 141	Resistor: Fixed, composition, 1K ± 10%, 1/2 W
R-142	R-142	Resistor: Fixed, composition, 470K ± 10%, 1/2 W
R-143	R-143	Resistor: Fixed, composition, 33K ± 5%, 1/2 W
R-144	R-144	Resistor: Fixed, composition, 24K ± 5%, 1/2 W
R-145	R-145	Resistor: Fixed, composition, 330K ± 10%, 1/2 W
R-146, 147	R-146, 147	Resistor: Fixed, composition, 33K ± 5%, 1/2 W
R-148	R-148	Resistor: Fixed, composition, 47K ± 10%, 1/2 W
R-149, 150, 151	R-149, 150, 151	Resistor: Fixed, composition, 100K ±10%, 1/2 W
R-152	R-152	Resistor: Fixed, composition, 10K ± 10%, 1/2 W
R-153	R-153	Resistor: Fixed, composition, 4.7K ± 10%, 1 W
R-154	R-154	Resistor: Fixed, composition, 220K ± 10%, 1/2 W
R-155	R-155	Resistor: Fixed, composition, 47K ± 10%, 1/2 W
R-156	R-156	Resistor: Fixed, composition, 10K ± 10%, 1/2 W
R-157	R-157	Resistor: Fixed, composition, 1K ± 10%, 1/2 W
R-158	R-158	Resistor: Fixed, composition, 10K ± 10%, 1/2 W

Courtesy of http://BlackRadios.terryo.org

Symbol No.		Description
1501	1502	
R-159		Not used
	R-159	Resistor: Fixed, wirewound, 3.5 ohms ± 5%, 10 W
R-160	R-160	Resistor: Fixed, wirewound, 6K ± 10%, 10 W
R-161	R-161	Resistor: Fixed, wirewound, 2.5K ± 10%, 10 W
R-162	R-162	Resistor: Fixed, composition, 20K ± 10%, 1 W
R-163	R-163	Resistor: Fixed, composition, 47K ± 10%, 2 W
R-164	R-164	Resistor: Variable, composition, 10K ± 20%, 2 W
R-165	R-165	Resistor: Fixed, composition, 2K ± 10%, 1/2 W
R-166	R-166	Resistor: Fixed, composition, 1 meg ± 10%, 1/2 W
R-167	R-167	Resistor: Fixed, composition, 240K ± 10%, 1/2 W
R-168	R-168	Resistor: Fixed, composition, 22K ± 10%, 1/2 W
R-169	R-169	Resistor: Fixed, composition, 470K ± 10%, 1/2 W
R-170	R-170	Resistor: Variable, composition, 250K ± 20%, 2 W
R-171	R-171	Resistor: Fixed, composition, 10K ± 10%, 1/2 W
R-172	R-172	Resistor: Fixed, composition, 1K ± 10%, 1/2 W
R-173	R-173	Resistor: Fixed, composition, 1 meg ± 10%, 1/2 W
R-174	R-174	Resistor: Fixed, composition, 220K ± 10%, 1/2 W
R-175	R-175	Resistor: Fixed, composition, 3.3 K ± 5%, 1/2 W
R-176	R-176	Resistor: Fixed, composition, 15K ± 10%, 1/2 W
R-177	R-177	Resistor: Fixed, composition, 47K ± 10%, 1/2 W
R-178	R-178	Resistor: Fixed, composition, 3.3K ± 5%, 1/2 W
R-179	R-179	Resistor: Fixed, composition, 22K ± 10%, 1/2 W
R-180	R-180	Resistor: Variable, composition, 50K ± 20%, 2 W
R-181	R-181	Resistor: Fixed, composition, 10K ± 10%, 1 W
R-182	R-182	Resistor: Fixed, composition, 6.8K ± 10%, 1 W
R-183	R-183	Resistor: Fixed, composition, 100K ± 10%, 1/2 W
R-184, 185	R-184, 185	Resistor: Fixed, composition, 1 meg ± 10%, 1/2 W
R-186	R-186	Resistor: Fixed, composition, 51 ohms ± 5%, 1/2 W
R-187	R-187	Resistor: Fixed, composition, 100 ohms ± 5%, 1/2 W
R-188	R-188	Not used
R-189	R-189	Not used
R-190	R-190	Resistor: Fixed, composition, 24K ± 5%, 1/2 W
R-201		Resistor: Fixed, composition, 120 ohms ± 5%, 1/2 W
	R-201	Resistor: Fixed, composition, 160 ohms ± 5%, 1/2 W
R-202		Resistor: Fixed, composition, 4.7K ± 10%, 1 W
	R-202	Resistor: Fixed, composition, 100 ohms ± 5%, 1/2 W
R-203		Resistor: Fixed, composition, 4.7K ± 10%, 1 W
	R-203	Resistor: Fixed, composition, 8.2K ± 5%, 1/2 W
R-204		Resistor: Fixed, composition, 470K ± 10%, 1/2 W
	R-204	Resistor: Fixed, composition, 150K ± 5%, 1/2 W
R-205		Resistor: Fixed, composition, 470K ± 10%, 1/2 W
	R-205	Resistor: Fixed, composition, 1.5K ± 5%, 2 W
R-206		Resistor: Fixed, composition, 270K, ± 10%, 1/2 W
	R-206	Resistor: Fixed, composition, 5.6K ± 5%, 1 W
R-207		Not used
	R-207	Resistor: Fixed, composition, 6.2K ± 5%, 1 W
R-208		Resistor: Fixed, composition, 8.2K ± 10%, 2 W
	R-208	Resistor: Fixed, composition, 120 ohms ± 5%, 1/2 W
R-209		Resistor: Fixed, composition, 27K ± 10%, 1/2 W
	R-209, 210	Resistor: Fixed, composition, 470K ± 10%, 1/2 W
R-210		Not used
R-211		Resistor: Fixed, composition, 220 ohms ± 10%, 1/2 W
	R-211	Resistor: Fixed, composition, 27K ± 10%, 1/2 W
	R-212	Resistor: Fixed, composition, 150K ± 10%, 1/2 W
	R-213	Resistor: Fixed, composition, 8.2K ± 10%, 2 W
	R-214	Resistor: Fixed, composition, 27K ± 10%, 1/2 W
	R-215	Resistor: Fixed, composition, 220 ohms ± 10%, 1/2 W

Courtesy of http://BlackRadios.terryo.org

Symbol No.		Description
1501	1502	
S-101	S-101	Switch: Rotary, Nems-Clarke part/dwg no. A-14,800
S-102	S-102	Switch: Toggle, SPDT
S-103	S-103	Switch: Rotary, Nems-Clarke part/dwg no. A-14,801
S-104	S-104	Switch: Toggle, SPST
S-105	S-105	Switch: Toggle, DPDT
S-106	S-106	Switch: Toggle, DPST
T-101	T-101	Transformer: I. F., Nems-Clarke part/dwg no. AB-14,796
T-102	T-102	Transformer: I. F., Nems-Clarke part/dwg no. AB-14,794
T-103	T-103	Transformer: I. F., Nems-Clarke part/dwg no. AB-14,797
T-104	T-104	Transformer: I. F., Nems-Clarke part/dwg no. AB-14,795
T-105	T-105	Transformer: I. F., Nems-Clarke part/dwg no. AB-14,797
T-106	T-106	Transformer: I. F., Nems-Clarke part/dwg no. AB-14,793
T-107	T-107	Transformer: I. F., Nems-Clarke part/dwg no. AB-14,799
T-108	T-108	Transformer: I. F., Nems-Clarke part/dwg no. B-14,976
T-109	T-109	Transformer: I. F., Nems-Clarke part/dwg no. AB-14,798
T-110	T-110	Transformer: Power step-down and step-up, dwg no. AB-14,733
T-111	T-111	Transformer: Audio Frequency, Nems-Clarke part/dwg no. B-14,487
TB-101	TB-101	Terminal Board: Phenolic, barrier type
V-101, 102, 103,104	V-101,102,103,104	Not used
V-105, 106	V-105, 106	Tube: Electron, 6DC6
V-107	V-107	Tube: Electron, 6CB6
V-108	V-108	Tube: Electron, 6AK5
V-109, 110	V-109, 110	Tube: Electron, 6AL5
V-111	V-111	Tube: Electron, 6CB6
V-112	V-112	Tube: Electron 5R4GY
V-113, 114	V-113, 114	Tube: Electron, OA2
V-115, 116,117,118	V-115,116,117,118	Tube: Electron, 12AU7
V-201		Not used
	V-201	Tube: Electron, 416B
V-202	V-202	Tube: Electron, 6J4
V-203	V-203	Tube: Electron, 6AK5
V-204	V-204	Tube: Electron, 6AF4A
XC-101	XC-101	Socket: Electron Tube, octal
XF-101, 102	XF-101, 102	Fuseholder: Extraction post type
XI-101	XI-101	Light: Indicator, 5/8 in. dia.
XK-101	XK-101	Socket: Electron tube, min. 9-pin
XV-101 thru XV-104	XV-101 thru XV-104	Not used
XV-105, 106, 107, 108, 109, 110, 111, 113, 114	XV-105, 106, 107, 108, 109, 110, 111, 113, 114	Socket: Electron tube, min. 7-pin
XV-112	XV-112	Socket: Electron tube, octal
XV-115, 116, 117, 118	XV-115, 116, 117, 118	Socket: Electron tube, min. 9-pin
	XV-201	Socket: Electron tube, 3-contact
XV-202, 203, 204	XV-202, 203, 204	Socket: Electron tube, min. 7-pin

Courtesy of http://BlackRadios.terryo.org

ADDENDA

MODELS 1501 AND 1502

SPECIAL PURPOSE RECEIVERS

Action Taken	Description
1. Change	C-147 and C-160: from 500 μμf to 390 μμf ±10%, Erie style 331
2. Add	R-191: Resistor 51 Ω ±5%, 1/2W, AB
3. Add	Solder lug under J-104
4. Relocate	C-138: so as to connect from terminal A of T-101 to the added ground lug (item 3).
5. Add	C-262: Capacitor; Disc; .0047 mfd; Sprague type 20C8, from terminal of C-144 to ground as tube mounting strap nut for V-105.
6. Add	C-263: Capacitor; Disc; .0047 mfd, Sprague type 20C8, from terminal of C-153 to ground on the tube mounting strap nut for V-106.
7. Add	L-130: Choke; 2.8 μh, part/dwg no. A-16,625 between pin 3 of V-105 to pin 3 of V-106.
8. Add	C-259: Capacitor; Disc; .0047 mfd, Sprague type 20C8, from pin 3 of V-105 to ground on the tube socket mounting strap nut.
9. Change	L-118: from 2.5 μh to 2.5 μh to 2.8 μh choke per part/dwg no. A-16,625
10. Change	C-163 and C-150: from 1.5 μμf to 1.8 μμf ±0.1 μμf, Erie type NPOA
11. Change	C-162 and C-149: from 1.5 μμf ±0.25 μμf to 1.5 μμf ±0.25 μμf to 1.5 μμf ±0.1 μμf, Erie type NPOA
12. Change	C-140 and C-141: from 2.0 and 1.5 μμf respectively to 2.2 μμf ±0.1 μμf, Erie type NPOA
13. Change	R-118: from 22K to 10K ±5%, 1/2W, AB resistor
14. Add	R-192: Resistor; 100 Ω ±10%, 1/2W AB resistor from C-166 to terminal C of T-103
15. Add	C-260: Capacitor; disc; .0047 mfd, Sprague type 20C8 from terminal C of T-103 to ground on the tube socket mounting strap nut for V-106
16. Remove	Solder lug connecting to terminal D of T-104
17. Add	Tie post, per part/dwg no. A-14,972, using the hole that held item 16 above. Ground terminal D of T-104 to the tube socket mounting. Drill a hole as required in the IF amplifier bottom cover and install a screw to ground the bottom cover to the tie post just installed.
18. Change	J-105: from a UG-262/U to a UG-291/U connector
19. Change	P-104: from a UG-260/U to a UG-88/U connector
20. Change	Connecting cable between items 18 and 19 from RG-62/U to RG-55/U
21. Add	C-257: Capacitor, ceramic, feed-thru 1000 μμf MRC, 500V
22. Add	C-258: Same as C-257
23. Add	L-212: Coil, R.F., 1.67 μh, NEMS-CLARKE part/dwg number A-14,737

Courtesy of http://BlackRadios.terryo.org

Action Taken	Description
24. Change	R-204: From 150K, ±5%, 1/2W to 51K, ±5%, 1/2W
25. Add	R-216: Resistor, Fixed, Composition, 100 ohms, ±5%, 1/2W
26. Add	R-217: Resistor, Fixed, Composition, 510 ohms, ±5%, 1W
27. Add	R-218: Resistor, Fixed, Composition, 1000 ohms, ±5%, 1W
28. Add	R-219: Resistor, Fixed, Composition, 100K, ±5%, 1/2W
29. Add	C-261A, B: Capacitor, printed circuit per NEMS-CLARKE part/dwg no. A-17,729
30. Add	L-213: Coil, 2.8 μh, NEMS-CLARKE part/dwg no. A-16,625

Courtesy of http://BlackRadios.terryo.org

SUPPLEMENT

ADAPTATION OF 1501/1502 RECEIVER INSTRUCTION BOOK TO 1501-A/1502-A.

The following information represents the changes necessary to correct this book for use with the Models 1501-A/1502-A. With the changes noted hereon, the instructions for the 1501/1502 are applicable throughout, with necessary change of nomenclature where applicable.

1. Photographs: Photographs of the front panel no longer represent the unit exactly since the front panel has been modernized and presents a new appearance. The photographs of the main chassis are the same as the previous model except the absence of the electron tube V-101, which is replaced by CR-101 through CR-104. The gear train has also been modified and improved, but the photos of the IF strip are the same. In the case of the 1502-A receiver RF tuner, the time delay relay has been included on the RF chassis.

2. Schematic Diagram: A modified schematic diagram has been inserted at the back of the book.

3. Parts List: There have been certain modifications in the parts list not included in this supplement; in the event there is any conflict between the parts list and the modified schematic diagram, the modified schematic diagram is the final authority.

The purchaser should fill out the stamped self-addressed post card enclosed in the packing carton and return to the manufacturer and a copy of the complete printed book will be sent as soon as they are available.